GEZE PACE

Pedestrian Access Control Equipment

5-B

Contents.

SW range 6
Speed gates with a sweeper system

SB range 12
Speed gates with blades

SL range 15
Speed gates with folding high gates

TT range 16
Turnstiles with tripod arms

OX range 21
Turnstiles with a rotor system

SG range 24
Turnstiles with swing gates

OX GS & OX TS 26
Servo-driven gates

Full height range 27

Additional equipment 29

PACE Pedestrian Access Control Equipment.

GEZE, in partnership with TiSO, introduces PACE Pedestrian Access Control Equipment – a range of pedestrian traffic control products that complements our automatic door control systems to offer a complete solution of building entrances providing safety and security.

The range includes tripod turnstiles, swing gates, rotor turnstiles, speed gates, full height turnstiles as well as associated products such as emergency gates, platforms, card readers and card collectors.

From the simplest, easy to install, tripod system for use in buildings such as leisure centres to the most stylish, highly sophisticated, security system with anti-tailgating sensors designed for the most demanding government buildings or banking institutions, there is a system to perfectly fit.

JUST SOME OF THE OPTIONS AVAILABLE INCLUDE:

- Bi-directional flow of traffic
- Standard or wide lanes
- Anti-tailgating sensors
- Illuminated glass panels or wings
- Range of housing finishes – brushed stainless steel, polished stainless steel, RAL powder coating
- Option to operate with card readers
- Suitable for disability access
- Full technical support, CAD drawings, technical data sheets
- Warranty 12-24 months.

All products are manufactured in strict compliance with international standards and meet all modern, quality, safety, design and usability requirements. EN 17352:2022 specifies requirements and test methods for power operated pedestrian entrance control equipment such as powered turnstiles, swing lanes and retractable lanes.** That is proved by such certificates as Certificate of Conformity No. OSE –12-1017/02; Certificate of Conformity of Quality Control System to requirements of the standard ISO 9001:2008; SK certificate of constancy of performance of essential characteristics of product according to STN EN 16034:2015 No. SK01-ZSV-0340; Certificate DSTU ISO 9001:2009; Certificate of Confirmity, according to EU Directives: 2006/42/EC; 2014/30/EU; 2014/35/EU; Certificate of passed barrier testing program ASTM F2656-07; Certificate of passed barrier testing program ASTM F2656/F2656M-15; Certificate of passed barrier testing program IWA 14-1:2013.

GEZE's PACE range of pedestrian access control combines perfectly with GEZE automatic door systems to give specifiers and building owners the complete package to control the flow of people in and around a building ensuring safety and security at all times for those using it.

- Passage width, mm
- Opening/closing, sec
- Free access, pers/min
- Single pass, pers/min
- Protection level*
- Version for disabled available
- Access control system
- Push button
- Motorised
- Bi-directional
- Anti-tailgating
- Drop-arm

* First figure is standard, all other available upon request.

Product specifications and complete sets may differ from that shown on the photo. Drawings in catalogue are placed for reference. Dimensions may vary depending on configuration.

**On the 2nd August 2023 EN 17352:2022 was listed as a harmonised standard in support of Directive 2006/42 in the Official Journal of the European Union. EN 17352:2022 – Power operated pedestrian entrance control equipment – Safety in use – Requirements and test methods, covers powered turnstiles and speed lanes.

SW 100

THE SW 100 SPEED GATE IS A GOOD CHOICE FOR PROJECTS WHERE SOPHISTICATED DESIGN IS KEY.

Glass top and side panels, as well as this speed gate's appearance in general, provide a feeling of transparency and make it a suitable solution for the most demanding and stylish interiors. The SW 100 speed gate's operation principle, together with the swinging wings, enables wide lanes to be established. This type of speed gate can be controlled using a push button or interfaced with a variety of access control system solutions and provides an anti-tailgating function. In case of power failure, the option of a back-up battery is available.

In the event of a power failure, the leaves can be manually opened (fail-safe).

Controlled by:

- Access control system
- Push button

30 | 0.3 0.6 | 550/900 | IP 41

TECHNICAL SPECS:

Width, mm	Single pass 550 Accessible pass 900
Mechanism	*BMDrive® servodrive (BLDC)
Standard housing	Brushed SS AISI 304
Available housing	Brushed SS AISI 316 Polished SS AISI 304 Polished SS AISI 316 Powder coated RAL

*BMDrive® ensures long term maintenance free operation and automatically analyses the system, detects critical malfunctions, and records error log and warnings.

ELECTRICAL SPECS:

- Voltage:
  - from the AC (100-240)V, 50/60Hz;
  - from a DC source 12 V

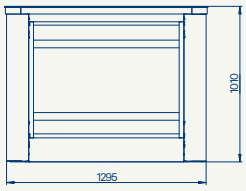

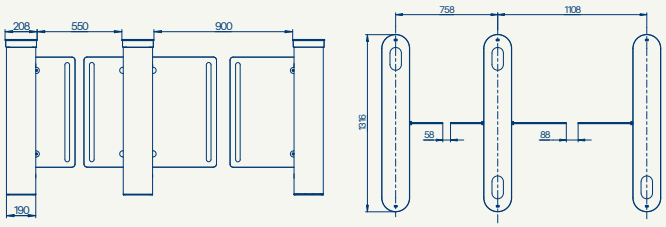

Solid Glass Top

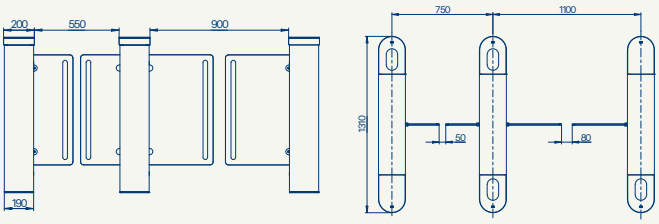

Stainless Steel Top with Glass Inserts

SW 100 Wide

THE SW 100 WIDE SPEED GATES HAVE AN ULTRA-MODERN FUTURISTIC DESIGN AND ARE IDEAL FOR STYLISH LOBBY INTERIORS IN HOTELS, BANKS AND OFFICES.

The swinging waist-high turnstile SW 100, with increased flow capacity, can operate in two modes: normally closed and normally open. Both directions of passage are free when the turnstile is de-energised. The large number of sensors enable the speed gates to detect when two people try to pass by one card, pass in the wrong direction or pass without authorisation and sounds an alarm. Safety sensors also prevent a passing person from being struck by a leaf, even in case of an unauthorised passage and detects the passage of person with luggage, arranging a free exit without the need for identification.

In the event of a power failure, the leaves can be manually opened (fail-safe).

Controlled by:

- Access control system
- Push button

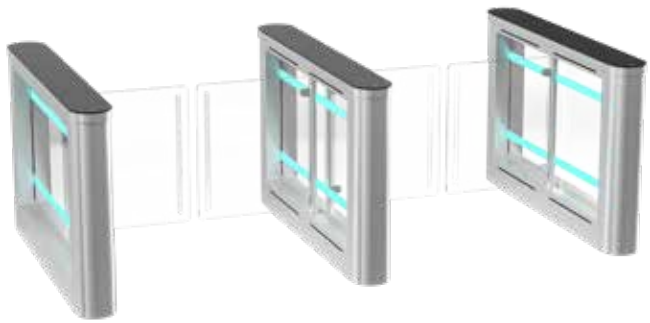

30 | 0.9 | 1200 | IP 41

TECHNICAL SPECS:

Width, mm	Single pass 1200
Mechanism	*BMDrive® servodrive (BLDC)
Standard housing	Brushed SS AISI 304
Available housing	Brushed SS AISI 316 Polished SS AISI 304 Polished SS AISI 316 Powder coated RAL

*BMDrive® ensures long term maintenance free operation and automatically analyses the system, detects critical malfunctions, and records error log and warnings.

ELECTRICAL SPECS:

- Voltage:
  - from the AC (100-240)V, 50/60Hz;
  - from a DC source 12 V

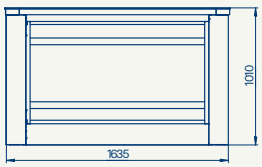

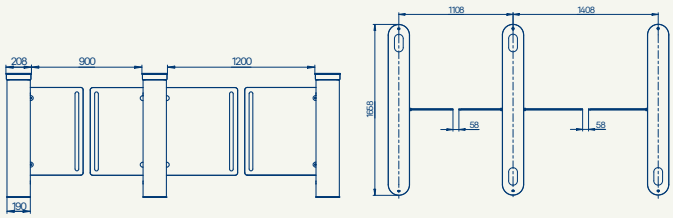

Solid Glass Top

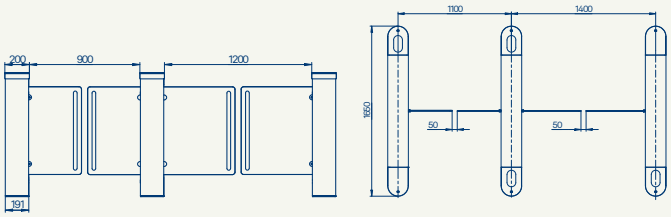

Stainless Steel Top with Glass Inserts

SW 100 High Glass

THE SW 100 HIGH GLASS IS A SPECIAL VERSION OF THE SW 100 WITH TALL GLASS WINGS.

The tall glass wings of the SW 100 High Glass increases security by minimising the risk of people climbing over the barrier. Its special design allows up to 900 mm wide passage which can be used for people with special needs. At the same time, both dimensions (height of wings and passage width) can be tailored according to the customer's needs. The wings are made from safety tempered glass, but can be also made of polycarbonate or metal tube (to provide vandal resistant features).

In the event of a power failure, the leaves can be manually opened (fail-safe).

Controlled by:

- Access control system
- Push button

30 25 | 0.7 0.9 | 550/900 | IP 41

TECHNICAL SPECS:

Width, mm	Single pass 550 Accessible pass 900
Mechanism	*BMDrive® servodrive (BLDC)
Standard housing	Brushed SS AISI 304
Available housing	Brushed SS AISI 316 Polished SS AISI 304 Polished SS AISI 316 Powder coated RAL

*BMDrive® ensures long term maintenance free operation and automatically analyses the system, detects critical malfunctions, and records error log and warnings.

ELECTRICAL SPECS:

- Voltage:
  - from the AC (100-240)V, 50/60Hz;
  - from a DC source 12 V

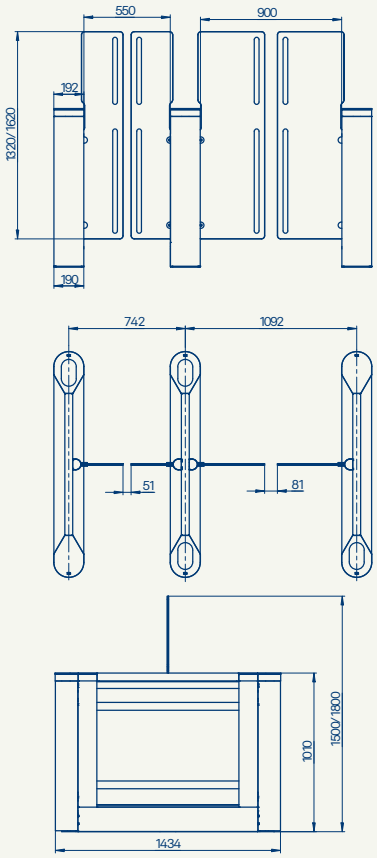

SW 100 High Glass Wide

THE SW 100 HIGH GLASS WIDE IS A VERSION OF SPEED GATE SW 100, IT HAS HIGH GLASS LEAVES FOR A HIGHER DEGREE OF SECURITY AND WIDER LANES FOR EASE OF CARRYING LUGGAGE AND WHEELCHAIR ACCESS.

High glass leaves help to avoid the transfer of anything above the turnstile, and reduces the risk of people jumping over it. The special design allows up to 1200 mm passage which can be used for people with special needs. The elegant cabinet is fitted with integrated LED lighting to indicate access status and is equipped with safety sensors and tailgate sensors. The SW 100 High Glass Wide can be integrated with any type of access control systems.

In the event of a power failure, the leaves can be manually opened (fail-safe).

Controlled by:

- Access control system
- Push button

20 | 0.9 | 1200 | IP 41

TECHNICAL SPECS:

Width, mm	Single pass 1200
Mechanism	*BMDrive® servodrive (BLDC)
Standard housing	Brushed SS AISI 304
Available housing	Brushed SS AISI 316 Polished SS AISI 304 Polished SS AISI 316 Powder coated RAL

*BMDrive® ensures long term maintenance free operation and automatically analyses the system, detects critical malfunctions, and records error log and warnings.

ELECTRICAL SPECS:

- Voltage:
  - from the AC (100-240)V, 50/60Hz;
  - from a DC source 12 V

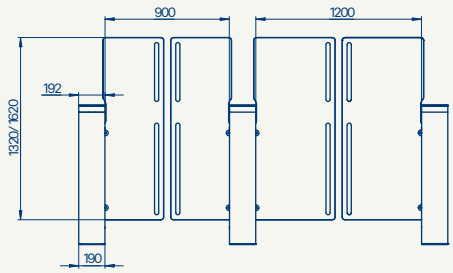

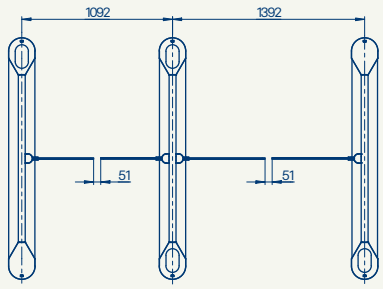

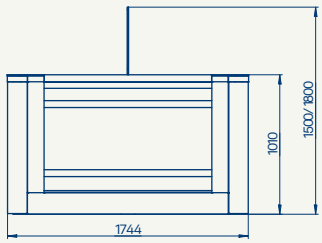

SW 100 Slim

THE SW 100 SLIM MODEL IS THE SLIM VERSION OF THE STYLISH SW 100.

It combines all the advantages of the popular SW 100 in a new re-designed housing offering a class leading footprint. Each cabinet is only 110mm wide making the SW 100 Slim suitable for any building. Standard operation uses two modes, normally open, and normally closed along with a host of operational modes when linked to an access control system. An option for shoulder height wings is available on request. Standard black or white glass tops incorporate card reader mountings and LED displays.

In the event of a power failure, the leaves can be manually opened (fail-safe).

Controlled by:

- Access control system
- Push button

30 25 | 0.7 1.0 | 550/1000 | IP 41

TECHNICAL SPECS:

Width, mm	Single pass 550 Accessible pass 1000
Mechanism	*BMDrive® servodrive (BLDC)
Standard housing	Brushed SS AISI 304
Available housing	Brushed SS AISI 316 Polished SS AISI 304 Polished SS AISI 316 Powder coated RAL

*BMDrive® ensures long term maintenance free operation and automatically analyses the system, detects critical malfunctions, and records error log and warnings.

ELECTRICAL SPECS:

- Voltage:
  - from the AC (100-240)V, 50/60Hz;
  - from a DC source 12 V

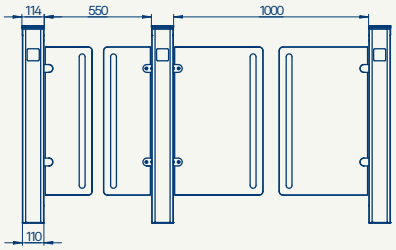

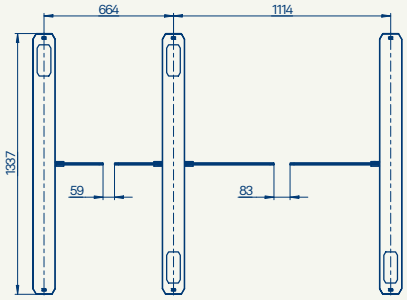

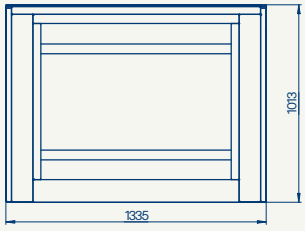

SW 100 Slim High Glass

THE SW 100 SLIM HIGH GLASS COMBINES A SLIM, ELEGANT DESIGN WITH A HIGH LEVEL OF SECURITY.

The slim, elegant design of the SW 100 Slim High Glass occupies minimal area combined with high levels of security making it ideal for hotels, banks and offices where ultra-modern futuristic look is required.

The full-height swing leaves of the turnstile guarantees a high level of security and a long service life. High leaves not only exclude the possibility of unauthorised passage, but also prevent the transfer of anything above the turnstile, as well as jumping over it. The use of impact-resistant tempered glass guarantees safety and gives a sophisticated modern look. Well-rounded design of the turnstile posts, changeable illumination and expressive indication makes this turnstile usage safe and comfortable for passengers.

In the event of a power failure, the leaves can be manually opened (fail-safe).

Controlled by:

- Access control system
- Push button

30 25 | 0.6 0.8 | 550/900 | IP 41

TECHNICAL SPECS:

Width, mm	Single pass 550 (SW100 Slim High Glass 550) Accessible pass 900 (SW100 Slim High Glass 900)
Mechanism	*BMDrive® servo-driven (BLDC)
Standard housing	Brushed SS AISI 304
Available housing	Brushed SS AISI 316 Polished SS AISI 304 Polished SS AISI 316 Powder coated RAL

*BMDrive® ensures long term maintenance free operation and automatically analyses the system, detects critical malfunctions, and records error log and warnings.

ELECTRICAL SPECS:

- Voltage:
  - from the AC (100-240)V, 50/60Hz;
  - from a DC source 12 V

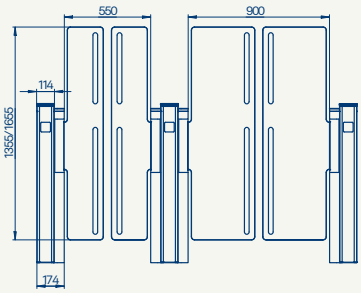

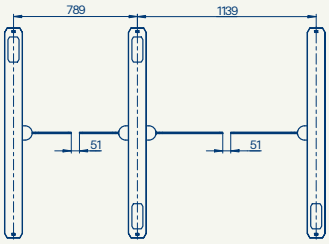

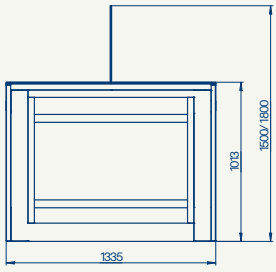

SB 100 & SB 100 Telescopic

THE SB 100 AND SB 100 TELESCOPIC ARE MOTORISED SPEED GATES FEATURING SLIDING BLADES.

The housing material and lightweight cabinet shape make the SB 100 and SB 100 Telescopic speed gates suitable for a large variety of facilities, especially those with a requirement for aesthetically attractive equipment. In addition, the SB 100 and SB 100 Telescopic include an anti-tailgating function. The sliding blades are made of glass, with polycarbonate an option. Turnstiles can be controlled by push button or via an access control system.

In the event of a power failure, the leaves can be manually opened (fail-safe).

Controlled by:

- Access control system
- Push button

Passage width 900 mm for disabled (telescopic)

40 | 0.5 0.9 | 550–900 | IP 41–54

TECHNICAL SPECS:

Width, mm	Single pass 550 Accessible pass 900
Mechanism	*BMDrive® servodrive (BLDC)
Standard housing	Brushed SS AISI 304
Available housing	Brushed SS AISI 316 Polished SS AISI 304 Polished SS AISI 316 Powder coated RAL

*BMDrive® ensures long term maintenance free operation and automatically analyses the system, detects critical malfunctions, and records error log and warnings.

ELECTRICAL SPECS:

- Voltage:
  - from the AC (100-240)V, 50/60Hz;
  - from a DC source 12 V

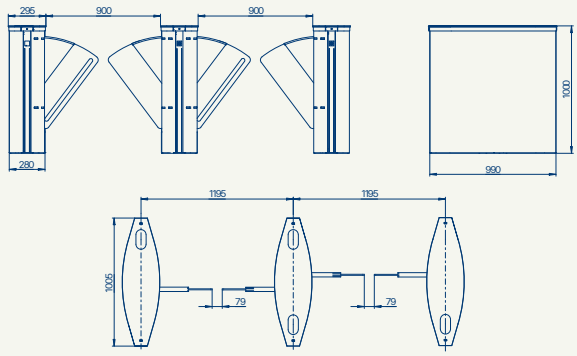

Solid Glass Top

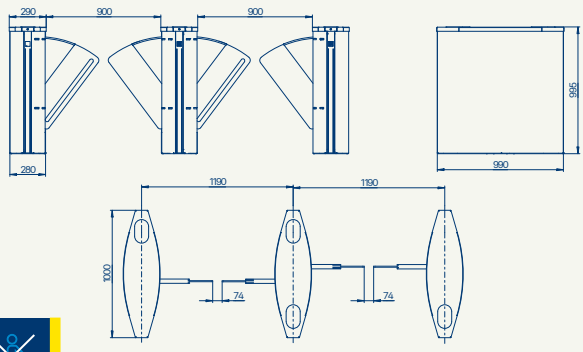

Stainless Steel Top

SB 200

THE SB 200 SPEED GATE COMBINES PROTECTION WITH AESTHETICS.

The SB 200 provides both effective protection of the building, similar to full height turnstiles, but at the same time offers a more graceful solution for stylish lobbies of office centres, banks, and other public facilities. High panels prevent items being carried over the speed gate. In addition the SB 200 can be printed with a customer's own logo on the sliding glass blades. An anti-tailgating function and back-up battery connection are provided.

In the event of a power failure, the leaves can be manually opened (fail-safe).

Controlled by:

- Access control system
- Push button

30 | 0.7 2.2 | 500 | IP 41

TECHNICAL SPECS:

Width, mm	Single pass 500
Mechanism	*BMDrive® servodrive (BLDC)
Standard housing	Brushed SS AISI 304
Available housing	Brushed SS AISI 316 Polished SS AISI 304 Polished SS AISI 316 Powder coated RAL

*BMDrive® ensures long term maintenance free operation and automatically analyses the system, detects critical malfunctions, and records error log and warnings.

ELECTRICAL SPECS:

- Voltage:
  - from the AC (100-240)V, 50/60Hz;
  - from a DC source 12 V

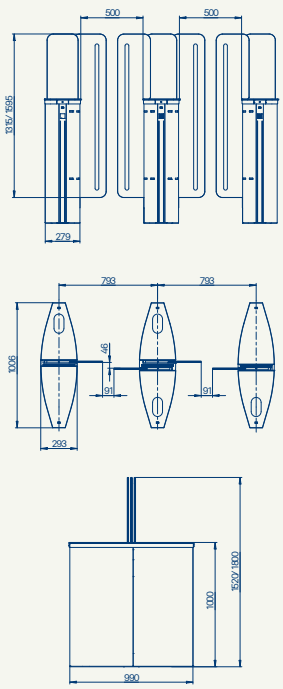

Solid Glass Top

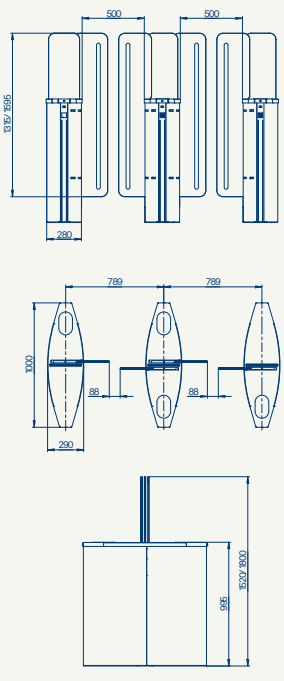

Stainless Steel Top

SB 250

THE SB 250 IS PERFECT FOR PROVIDING ACCESSIBLE BUT CONTROLLED PASSAGE.

With a 900 mm passage, the SB 250 is specially designed to ensure access for all. One of its main features is the possibility of placing TV screens for any type of information on the top of the housing. Advertising light boxes are also available for installation on the top and front parts of the housing. The combination of the above features with 1.6m high glass blades, short opening/closing time, high traffic capacity, reliability and contemporary design makes the SB 250 a perfect solution for installation in banks, office buildings, business centres, private and public enterprises. The turnstile is controlled manually or by an access control system.

In the event of a power failure, the leaves can be manually opened (fail-safe).

Controlled by:

- Access control system
- Push button

30 | 0.7 2.2 | 900 | IP 41

TECHNICAL SPECS:

Width, mm	Single pass 900
Mechanism	Servodrive
Standard housing	Brushed SS AISI 304
Available housing	Brushed SS AISI 316 Polished SS AISI 304 Polished SS AISI 316 Powder coated RAL

ELECTRICAL SPECS:

- Voltage:
  - from the AC (100-240)V, 50/60Hz;
  - from a DC source 12 V

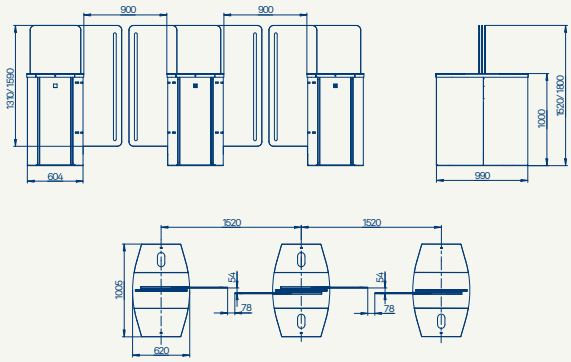

Solid Glass Top

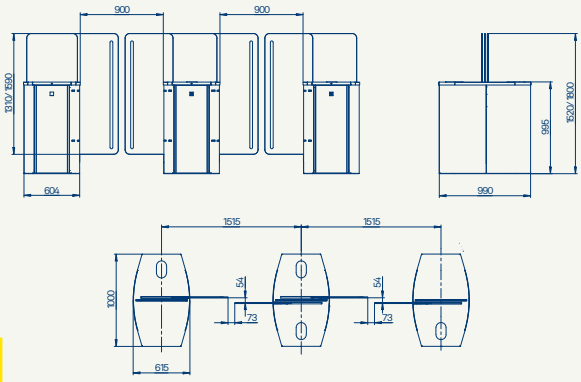

Stainless Steel Top

SL 550 and SL 900

THE SL 550 AND SL 900 SPEED GATES WITH FOLDING HIGH GATES ARE STYLISH ORIGINAL SOLUTIONS THAT GUARANTEES EFFECTIVE PROTECTION OF THE BUILDING.

Suitable for any location: office centres, banks, hotels... the folding system of the SL 550 and SL 900 has a more robust, reliable design compared to existing speed gates on the market. The height of the flaps excludes the possibility of unauthorised passage, and also prevents the transfer of any objects.

Sensors in the system detects and sounds the alarm when two people try to pass by one card, pass in the wrong direction or pass without authorisation. Digital control of force and leaf speed in combination with safety sensors prevent a passing person from being struck by a leaf, even in case of an unauthorised passage.

In the event of a power failure, the leaves can be manually opened (fail-safe).

Controlled by:

- Access control system
- Push button

30 | 0.7 | 550/900 | IP 41

TECHNICAL SPECS:

Width, mm	Single pass 550 Accessible pass 900
Mechanism	*BMDrive® servo-driven (BLDC)
Standard housing	Brushed SS AISI 304
Available housing	Brushed SS AISI 316 Polished SS AISI 304 Polished SS AISI 316 Powder coated RAL

*BMDrive® ensures long term maintenance free operation and automatically analyses the system, detects critical malfunctions, and records error log and warnings.

ELECTRICAL SPECS:

- Voltage:
  - from the AC (100-240)V, 50/60Hz;
  - from a DC source 12 V

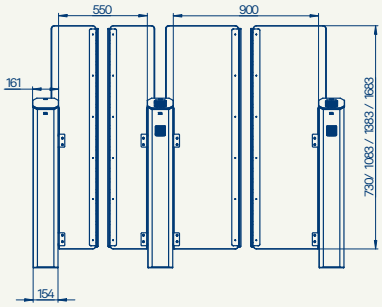

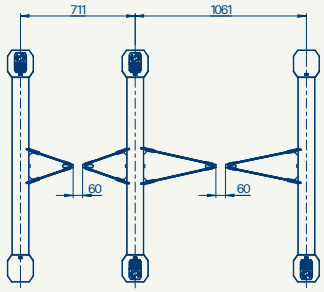

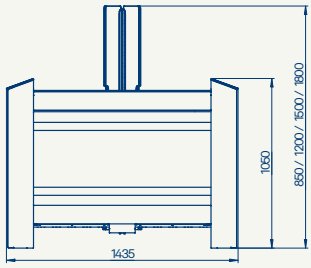

TT 200

THE TT 200 IS ONE OF THE MOST POPULAR OF THE TRIPOD STYLE TURNSTILES.

Taking minimum space and giving maximum efficiency the fast responding motor and quick operation will eliminate crowding at the entrance. The drop arm function efficiently enables free passage in case of emergency. A brushed or polished stainless steel finish will suit any interior (powder coated version available). The enclosure design means it is suitable for outdoor installation without an additional canopy or extensive alterations. As with other turnstiles in the tripod series, The TT 200 is available with a back-up battery connection.

TT 200 Twin modification is available (double sided).

In the event of a power failure, drop arm function activates automatically.

Controlled by:

- Access control system
- Push button

TECHNICAL SPECS:

Width, mm	Single pass 600
Mechanism	Servo-driven (Triservo-M)
Standard housing	Brushed SS AISI 304
Available housing	Brushed SS AISI 316 Polished SS AISI 304 Polished SS AISI 316 Powder coated RAL

ELECTRICAL SPECS:

- Voltage:
  - from the AC (100-240)V, 50/60Hz;
  - from a DC source 12 V

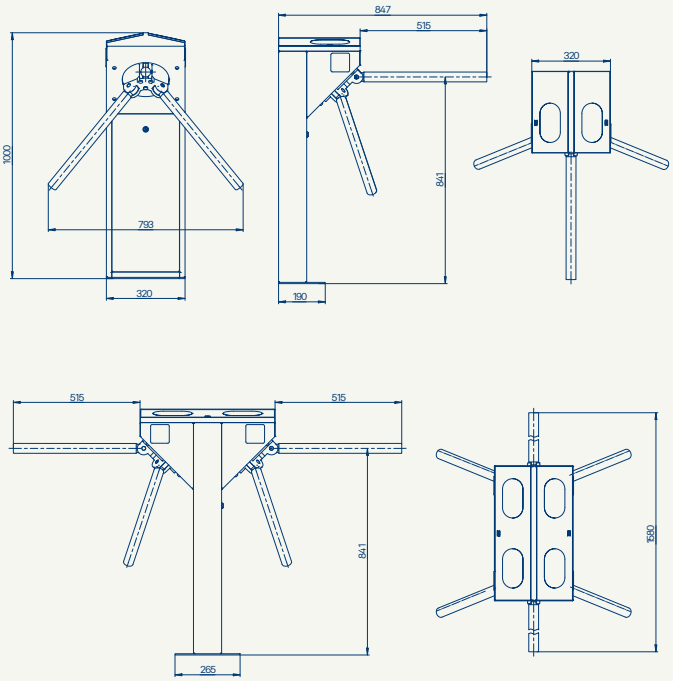

60 | 25 | 600 | IP 41-54

TT 300

THE TT 300 FEATURES THE BEST OF TT 400 AND TT 200 TURNSTILES.

Designed as a hybrid of the TT 400 and TT 200 turnstiles, the TT 300 features reliable and solid housing, and as with other tripods it has reader mounting brackets under the top. The TT 300 turnstile has a double LED indication – on the side and on top. The TT 300 is available with a back-up battery connection. A variety of housing finishing types enables this turnstile to be fitted to a range of buildings, both indoors and outdoors. A drop arm function is available.

TT 300 Twin modification is available (double sided)

In the event of a power failure, drop arm function activates automatically.

Controlled by:

- Access control system
- Push button

TECHNICAL SPECS:

Width, mm	Single pass 600
Mechanism	Servo-driven (Triservo-M)
Standard housing	Brushed SS AISI 304
Available housing	Brushed SS AISI 316 Polished SS AISI 304 Polished SS AISI 316 Powder coated RAL

ELECTRICAL SPECS:

- Voltage:
  - from the AC (100-240)V, 50/60Hz;
  - from a DC source 12 V

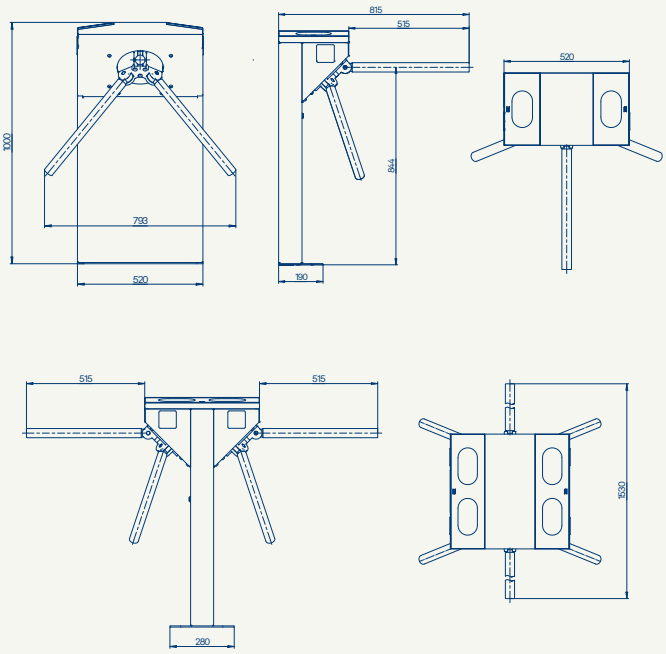

60 | 25 | 600 | IP 41-54

TT 400

THE TT 400 TURNSTILE IS A ROBUST AND RELIABLE MODEL OF THE TRIPOD TURNSTILE SERIES.

This model will efficiently control the entrance even in intensive pedestrian flow mode, making it suitable for heavily used sites like stadiums, industrial plants or factories. The TT 400 design is sleek and elegant, with a choice of housing finishing options it will fit perfectly in both modest interiors as well elegant office buildings. Robust design and high quality materials will ensure reliable operation for years. To overcome the potential problem of crowding in an emergency the TT 400 turnstile has a drop arm function.

TT 400 Twin modification is available (double sided).

In the event of a power failure, drop arm function activates automatically.
Controlled by:

- Access control system
- Push button

TECHNICAL SPECS:

Width, mm	Single pass 600
Mechanism	Servo-driven (Triservo-M)
Standard housing	Brushed SS AISI 304
Available housing	Brushed SS AISI 316 Polished SS AISI 304 Polished SS AISI 316 Powder coated RAL

ELECTRICAL SPECS:

- Voltage:
  - from the AC (100-240)V, 50/60Hz;
  - from a DC source 12 V

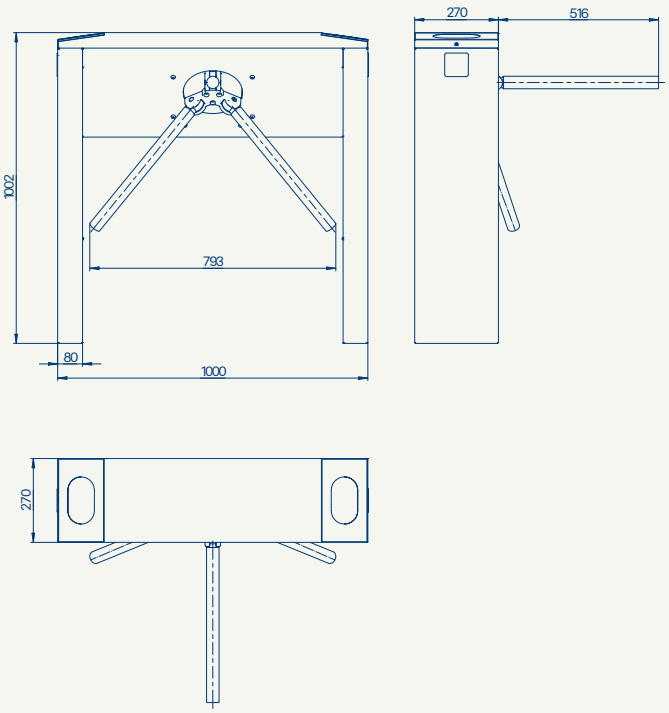

60 | 25 | 600 | IP 41-54

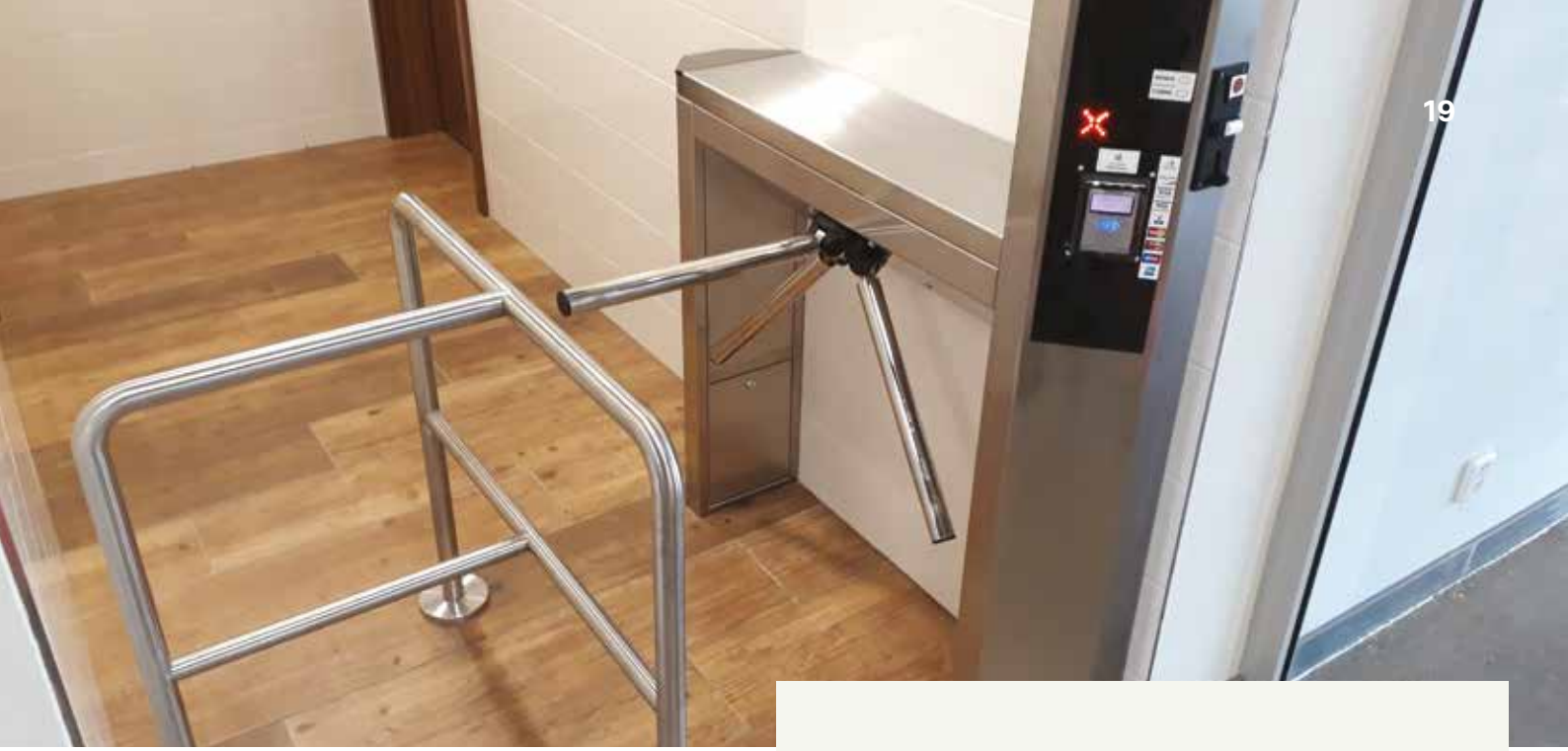

TT 450

THE ELEGANT TT 450 TURNSTILE CAN BE MADE IN DIFFERENT MATERIALS.

This allows you to choose the modification that will perfectly suit the building whether a bold, modern contemporary business centre or a simple interior access of an industrial facility. The TT 450 makes it easy to include the turnstile accessories – controllers, barcode scanners / fingerprint reader, coin acceptors, card reader, ticket printers and checks. Turnstile also has a place for advertising. The TT 450 is equipped with an anti-panic function to allow free access in an emergency. Mounting brackets for card readers are placed under the top by default.

In the event of a power failure, drop arm function activates automatically.

Controlled by:

- Access control system
- Push button

TECHNICAL SPECS:

Width, mm	Single pass 600
Mechanism	Servo-driven (Triservo-M)
Standard housing	Brushed SS AISI 304
Available housing	Brushed SS AISI 316 Polished SS AISI 304 Polished SS AISI 316 Powder coated RAL

ELECTRICAL SPECS:

- Voltage:
  - from the AC (100-240)V, 50/60Hz;
  - from a DC source 12 V

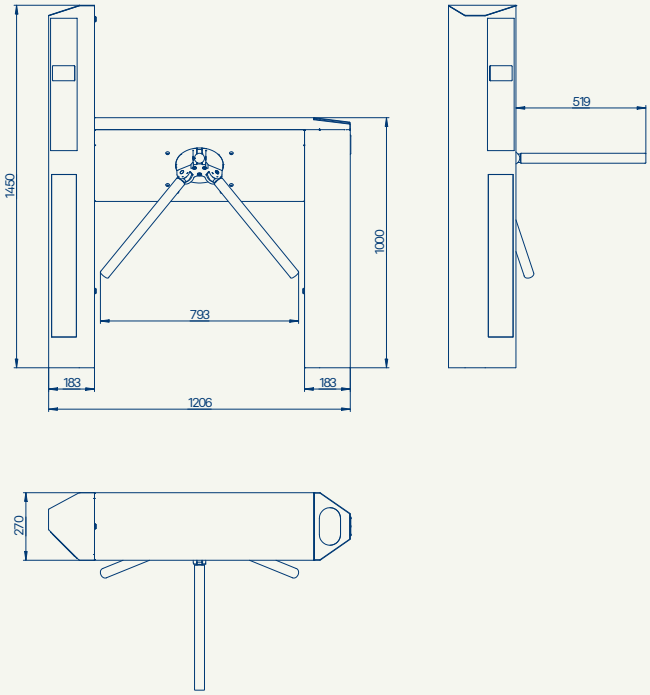

60 | 25 | 600 | 41-54

TT 500

THE TT 500 TURNSTILE COMBINES THE FUNCTIONAL TT 400 AND STYLISH SW 100.

The contemporary design of the cabinet is a stylish addition to the range. While the housing is manufactured from stainless steel, a number of finishes are available, polished, brushed etc. The TT 500 turnstile consists of transparent glass framed by high strength steel. The glass is equipped with LED indicators that change colour depending on the entrance mode. On the top of the TT 500 turnstile is a card reader and LED display. One of the advantages of the TT 500 is the ability to change the design according to the client's request. High routing speed provides huge traffic flow capacity.

In the event of a power failure, drop arm function activates automatically.

Controlled by:

- Access control system
- Push button

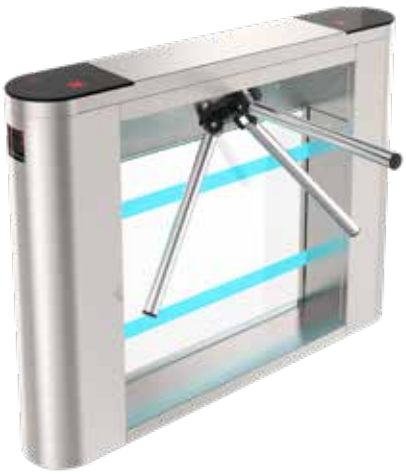

TECHNICAL SPECS:

Width, mm	Single pass 600
Mechanism	Servo-driven (Triservo-M)
Standard housing	Brushed SS AISI 304
Available housing	Brushed SS AISI 316 Polished SS AISI 304 Polished SS AISI 316 Powder coated RAL

ELECTRICAL SPECS:

- Voltage:
  - from the AC (100-240)V, 50/60Hz;
  - from a DC source 12 V

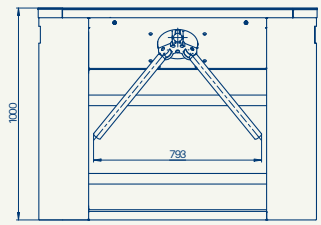

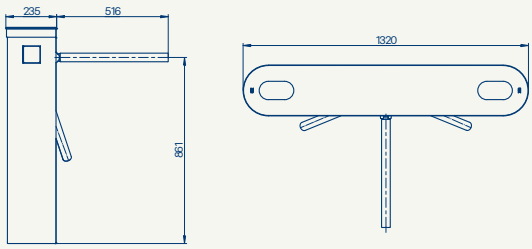

Solid Glass Top

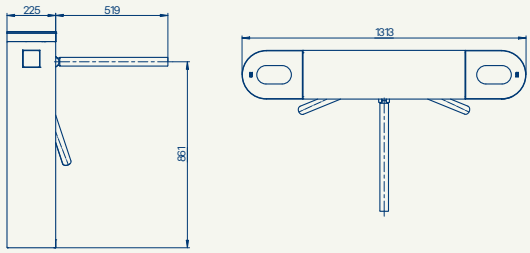

Stainless Steel Top with Glass Inserts

60 | 25 | 600 | IP 41

OX S

ERGONOMIC DESIGN WITH STYLISH BODY LINES IS THE DEFINING FEATURE OF THIS TURNSTILE.

The inclined scratch resistant glass top gives this turnstile a futuristic look making it a stylish architectural element to complement any modern interior. Equipped with an automatic bi-directional servo-drive mechanism with a robust locking system the OX S operates reliably and efficiently in high traffic flow locations. This model has a robust hub with stainless steel pods and a fully automatic anti-panic system. LED displays indicate direction of travel through the turnstile and can clearly determine the status of passage (Green – Access authorised, Red- Access denied and Blue – Standby mode).

In the event of a power failure, drop arm function activates automatically.

Controlled by:

- Access control system
- Push button

60 | 25 | 600 | 41

TECHNICAL SPECS:

Width, mm	Single pass 600
Mechanism	Servo-driven
Standard housing	Brushed SS AISI 304
Available housing	Brushed SS AISI 316 Polished SS AISI 304 Polished SS AISI 316 Powder coated RAL

ELECTRICAL SPECS:

- Voltage:
  - from the AC (100-240)V, 50/60Hz;
  - from a DC source 12 V

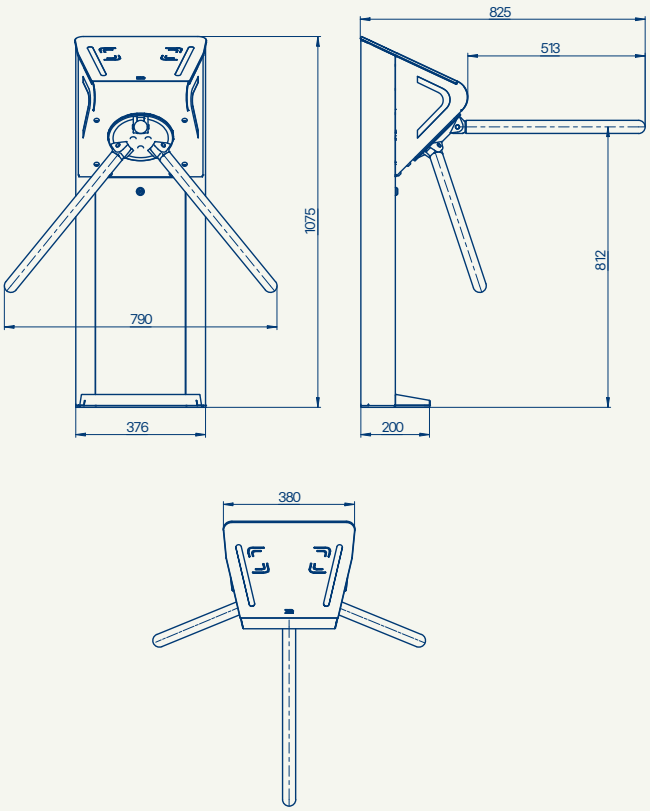

OX M

ERGONOMICALLY DESIGNED WITH STYLISH LINES WITH AN EFFICIENT CONTROL SYSTEM, THE OX M IS IDEAL FOR TODAY'S CONTEMPORARY INTERIORS.

The OX M is equipped with an automatic bi-directional servo-drive mechanism with a robust locking system and so operates reliably and efficiently in high traffic flow locations. This model also has an automatic anti-panic system; in an emergency, the arms are automatically lowered and users can freely pass through unhindered. The cabinet tops are made of a scratch-resistant black glass, which allows simple maintenance and long lasting aesthetics. LED displays indicate direction of travel through the turnstile and can clearly determine the status of passage (Green – Access authorised, Red- Access denied and Blue – Standby mode).

In the event of a power failure, drop arm function activates automatically.

Controlled by:

- Access control system
- Push button

60 | 25 | 600 | IP 41

TECHNICAL SPECS:

Width, mm	Single pass 600
Mechanism	Servo-driven
Standard housing	Brushed SS AISI 304
Available housing	Brushed SS AISI 316 Polished SS AISI 304 Polished SS AISI 316 Powder coated RAL

ELECTRICAL SPECS:

- Voltage:
  - from the AC (100-240)V, 50/60Hz;
  - from a DC source 12 V

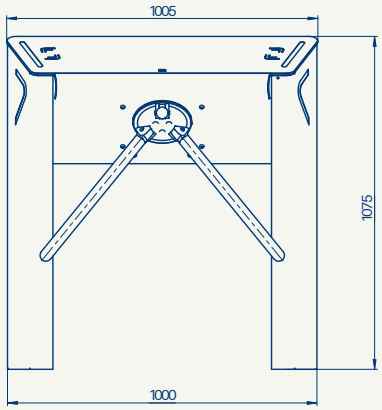

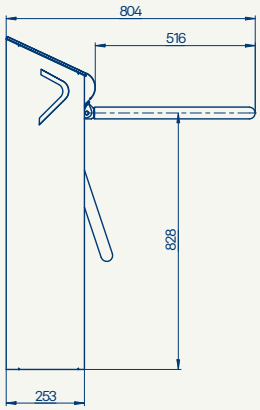

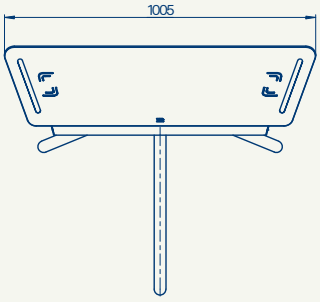

OX XL

OX XL IS A RELIABLE TURNSTILE WITH MAXIMUM INTEGRATED OPTIONS AND CONVENIENCE FOR EVERYONE.

The main feature is the “All-in-one” design; it is easy to include additional equipment – controllers, barcode scanners / fingerprint reader, coin acceptors, card reader, ticket printers etc. The waist-high tripod turnstile also has a place for advertising (LED backlight). It expands the range of objects for installing a turnstile and the inclined scratch resistant glass top gives this turnstile a futuristic look making it a stylish architectural element to compliment any interior. OX XL turnstiles have an automatic bidirectional servo-drive mechanism with a robust locking system and operate reliably and efficiently in high traffic flow locations. The OX XL also has a reliable hub with stainless steel pods and a fully automatic “anti-panic” system.

In the event of a power failure, drop arm function activates automatically.

Controlled by:

- Access control system
- Push button

60 | 25 | 600 | IP 41

TECHNICAL SPECS:

Width, mm	Single pass 600
Mechanism	Servo-driven
Standard housing	Brushed SS AISI 304
Available housing	Brushed SS AISI 316 Polished SS AISI 304 Polished SS AISI 316 Powder coated RAL

ELECTRICAL SPECS:

- Voltage:
  - from the AC (100-240)V, 50/60Hz;
  - from a DC source 12 V

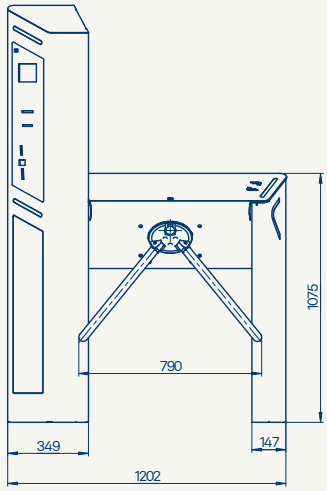

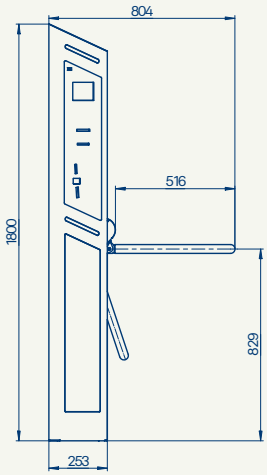

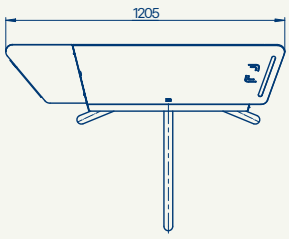

SG 100, SG 100 Telescopic & SG 100 Mechanical

THE SG 100 AND SG 100 TELESCOPIC OFFER FLEXIBILITY AND ARE SUITABLE FOR ALL BUILDINGS AND INTERIORS.

The SG 100 and SG 100 Telescopic swing gates have a motorised drive. The SG 100 Mechanical is a mechanical swing gate and can be locked manually by key. Swing gates offer a variety of different dimensions making them a useful solution to provide access control to people with special needs or are disabled. This type of access control equipment can be controlled manually both by push button or interfaced with wide variety of access control systems. Mostly, these solutions are used together with other turnstiles to provide wide lanes of up to 1000 mm. The design and operation of these swing gates enables individuals to pass freely, which is not possible with some other waist height turnstiles.

Modification to allow for wall mounting is an option.

In the event of a power failure, the gate can be manually opened (fail-safe).

Controlled by:

Access control system

Push button

SG 100

SG 100 Telescopic

650/1050 | IP 41-65

TECHNICAL SPECS:

Model	SG 100	SG 100 Telescopic	SG 100 Mechanical
Width, mm	Single pass 600 Accessible pass 850	Single pass 585 Accessible pass 1025	Single pass 585 Accessible pass 1025
Mechanism	Servo-driven		Mechanical
Standard housing	Brushed SS AISI 304		
Available housing	Brushed SS AISI 316 Polished SS AISI 304 Polished SS AISI 316 Powder coated RAL		

ELECTRICAL SPECS:

- Voltage:
  - from the AC (100-240)V, 50/60Hz;
  - from a DC source 12 V

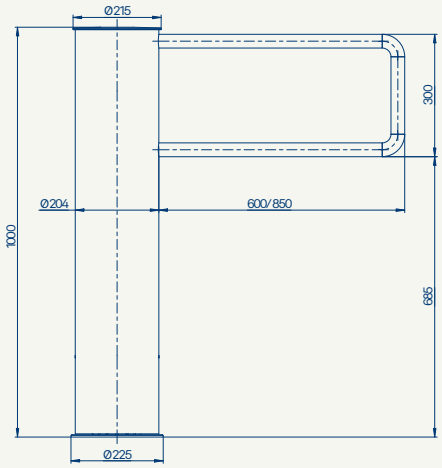

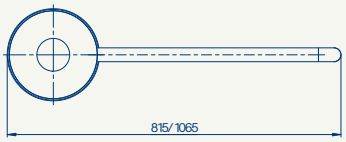

SG 100

SG 200, SG 200 Slim & SG 200 High Glass

SG 200, SG 200 SLIM AND SG 200 HIGH GLASS OFFER SINGLE OR DUAL DIRECTION CONTROL OF PEDESTRIAN ACCESS.

The primary purpose of the servo-type swing gate is single or dual direction control of pedestrian access for industrial premises, administrative establishments, banks, offices, shops, stations and other sites. Due to its unique shape and variety of models, it can suit any interior. The SG 200 range is easy to use, compact in size and feature a blade of glass in the swing gate. When receiving a command to permit passage the drive bar turns 90°, and after passage returns to its original position.

Modification to allow for wall mounting is an option.

In the event of a power failure, the gate can be manually opened (fail-safe).

Controlled by:

Access control system

Push button

SG 200

SG 200 High Glass

650/900 | IP 41-65

TECHNICAL SPECS:

Model	SG 200	SG 200 Slim	SG 200 High Glass
Width, mm	Single pass 600 Accessible pass 850		
Mechanism	Servo-driven		
Standard housing	Brushed SS AISI 304		
Available housing	Brushed SS AISI 316 Polished SS AISI 304 Polished SS AISI 316 Powder coated RAL		

ELECTRICAL SPECS:

- Voltage:
  - from the AC (100-240)V, 50/60Hz;
  - from a DC source 12 V

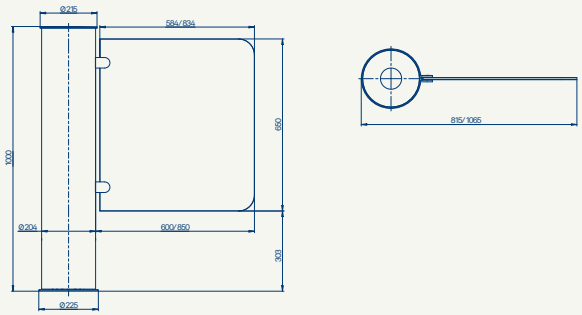

SG 200

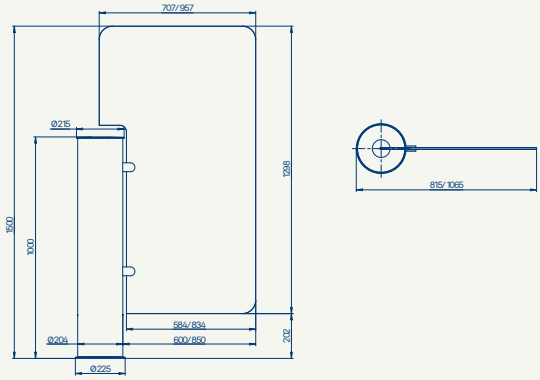

SG 200 High Glass

OX GS & OX TS

THE ERGONOMIC DESIGN OF THE SERVO-DRIVEN GATES OX GS AND OX TS WITH THE SMOOTH CURVED CASE ARE AN EXCELLENT SOLUTION FOR INSTALLATION TOGETHER WITH TRIPOD TURNSTILES OF THE OX SERIES.

Access control in both directions is carried out by turning the leaf in 90° automatically by the BMDrive® mechanism (no need to push). The gate is blocked in the closed position of the mechanism. The OX GS has a glass leaf whilst the OX TS has a metal leaf, the size of the leaves on both systems may be increased to allow for access of carts and oversized loads.

In the event of a power failure, the gate can be manually opened (fail-safe).

Controlled by:

Access control system

Push button

OX GS

OX TS

30 | 1.8 1.2 | 650-900 | IP 41

TECHNICAL SPECS:

Width, mm	Single pass 650 Accessible pass 900
Mechanism	*BMDrive® servo-driven (BLDC)
Standard housing	Brushed SS AISI 304
Available housing	Brushed SS AISI 316 Polished SS AISI 304 Polished SS AISI 316 Powder coated RAL

*BMDrive® ensures long term maintenance free operation and automatically analyses the system, detects critical malfunctions, and records error log and warnings.

ELECTRICAL SPECS:

- Voltage:
  - from the AC (100-240)V, 50/60Hz;
  - from a DC source 12 V

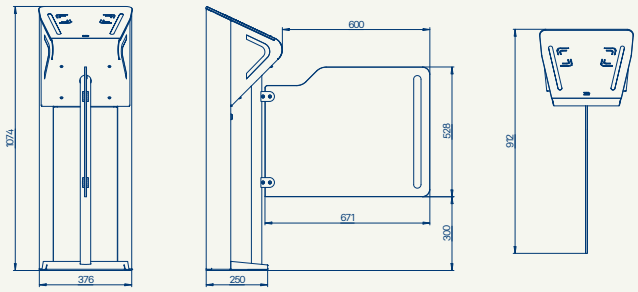

OX GS

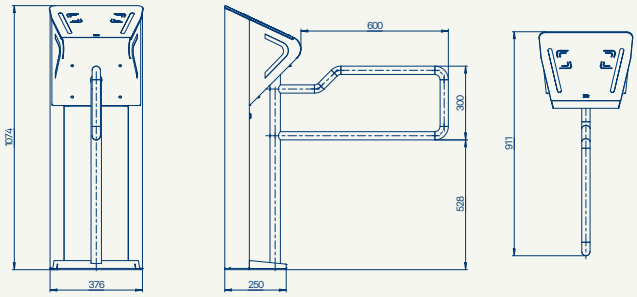

OX TS

HW G/NG

THE HW G/NG BOTH PERFECTLY COMBINE MODERN AESTHETICS AND FUNCTIONALITY.

The glass leaves and side panels are made of impact-resistant glass providing a feeling of transparency; ideal for the most demanding building entrances. HW G/NG combine different technologies to achieve state of the art performances, passage detection algorithms constantly monitor the flow of persons through the monitored area until they exit. High leaves exclude the possibility of unauthorised passage, and also prevent the transfer of anything above the turnstile, yet provides high visibility of pedestrian progress. The sophisticated sensor systems ensure a high object security and pedestrian safety.

In the event of a power failure, the leaves can be manually opened (fail-safe).

Controlled by:

- Access control system
- Push button

20 | 1.5 | 1000 | IP 41-54

TECHNICAL SPECS:

Width, mm	Single pass 1000
Mechanism	*BMDrive® servo-driven (BLDC)
Standard housing	Brushed SS AISI 304
Available housing	Brushed SS AISI 316 Polished SS AISI 304 Polished SS AISI 316 Powder coated RAL

*BMDrive® ensures long term maintenance free operation and automatically analyses the system, detects critical malfunctions, and records error log and warnings.

ELECTRICAL SPECS:

- Voltage:
  - from the AC (100-240)V, 50/60Hz;
  - from a DC source 12 V

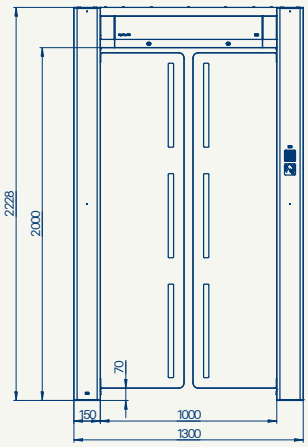

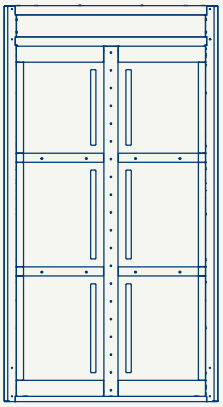

HW G

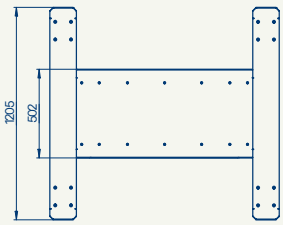

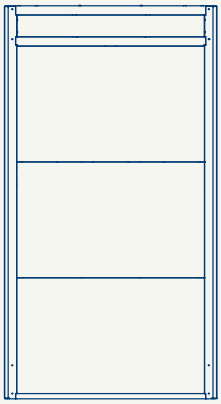

HW NG

ST 100 Full Height

THE ST 100 FULL HEIGHT IS AN IDEAL SOLUTION FOR AN INTERNAL SECURITY DOOR.

The operating principal is similar to a full height turnstile with the main difference being the glass blades and stainless-steel canopy, which provide a more aesthetically pleasing solution for security access within a building. The ST 100 Full Height can be controlled by various access control methods including bio metrics, card readers or via the manual control panel. Other options include full height glass blades making the ST 100 Full Height a great low-cost alternative to portals and security revolving doors.

In case of power failure, fail-secure by default (rotor locked in both directions)

Controlled by:

- Access control system
- Push button

20 | 620 | IP 41

TECHNICAL SPECS:

Width, mm	Single pass 620
Standard mechanism	Servo-drive
Standard housing	Brushed SS AISI 304
Available housing	Brushed SS AISI 316 Polished SS AISI 304 Polished SS AISI 316 Hot dip galvanised

ELECTRICAL SPECS:

- Voltage:
  - from the AC (100-240)V, 50/60Hz;
  - from a DC source 12 V

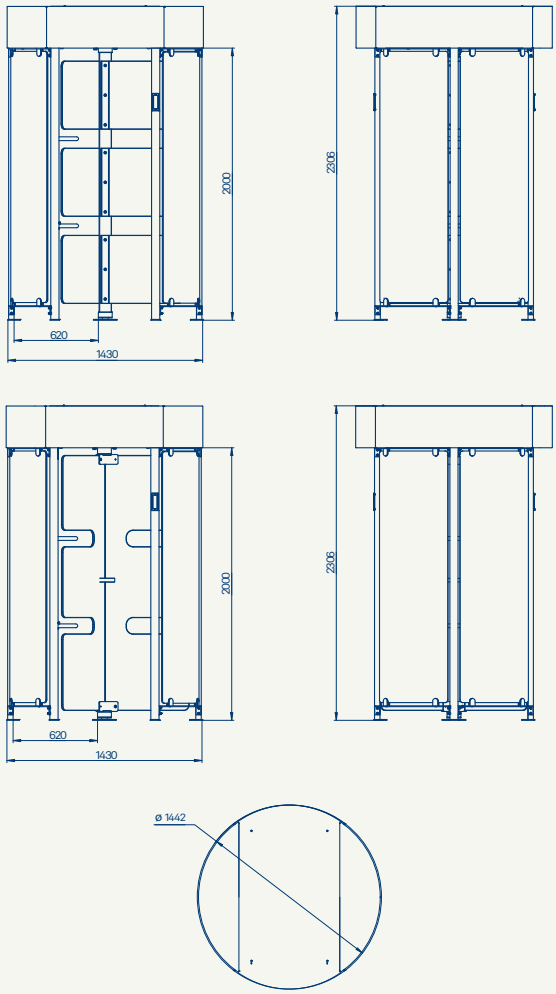

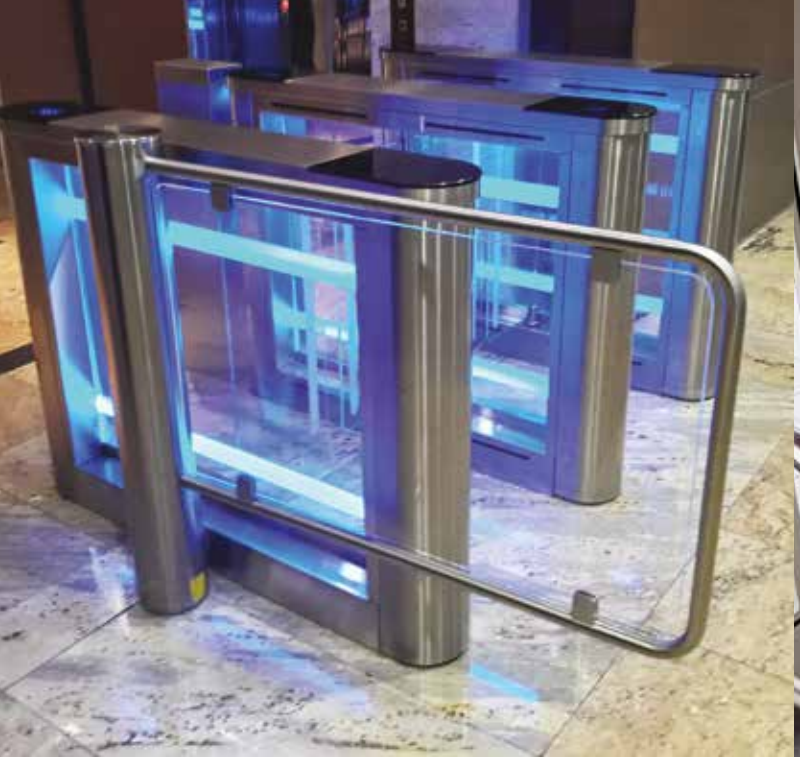

Enclosure

The stylish balustrade Enclosure is an integral accessory to any of our turnstiles. Its design is very simple but very efficient and easy to install. Any combination of side and middle posts can be used with different widths of glass.

Emergency Gate

The Emergency gate is designed to be installed at the entry points in all kinds of buildings but especially administrative buildings and banks where a free exit in an emergency is needed or for allowing large items to be moved through the area.

Mobile Platform

Mobile Platform consists of landing, enclosure and can have any tripod turnstile attached to it. The main purpose of the Mobile Platform is to ensure quick and easy displacement of an installed tripod turnstile to a place of temporary usage.

Card Reader

The card reader post is designed for installation as part of an access control system for banks, administrative buildings etc. Elegance, lightness and simplicity make this model very popular as part of an access control system.

Card Collector

Card-collector is an efficient and effective solution to organise the collection of temporary visitor cards.

The sleek and modern design enables the simple and easy to use collection of cards.

The LED indication under the beautiful glass top lid shows the status of the system (access denied or granted).

A built-in card-reader for permanent staff is available upon request.

TWiC

TWiC manages and controls large groups of turnstiles. The user friendly 8" touch screen display graphics requires minimal training for proficiency in navigating the various pages, remotely controlling the lanes and understanding the real time feedback such as alarm events when unauthorised access is detected.

UK Headquarters
GEZE UK Ltd. Blenheim Way, Fradley Park,
Lichfield, Staffordshire WS13 8SY

Tel: +44 (0) 1543 443000 **Email:** info.uk@geze.com
www.geze.co.uk

Connecting expertise –
building solutions.

02/24