F 1200

191270

GEZE

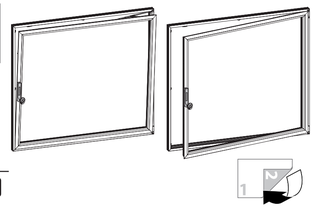

50712-EP-0100

50712-EP-0101

a [mm]	b [mm]
750 ... 3500	750 ... 2400

max. 200 kg

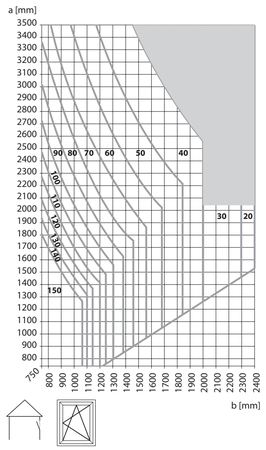

M5 x 16-H ISO 7046-1
M5 x 20 DIN 965
M5 x 30 DIN 966
M5 x 30 ISO 746-1

TX 10 | 2,5 mm | 3 mm | Ø 4,2 mm / M5 | Ø 7,1 mm | Ø 8,1 mm

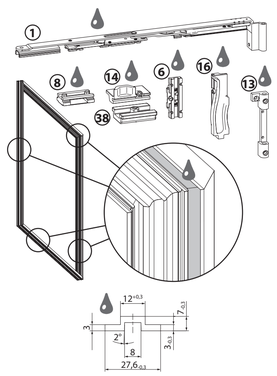

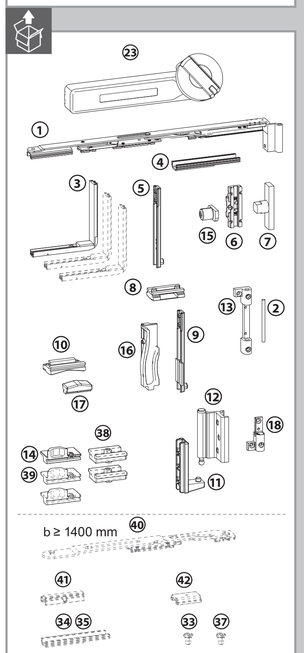

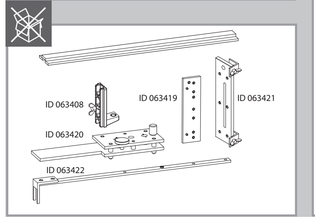

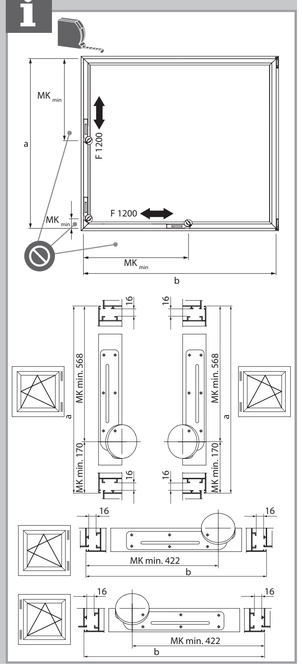

1

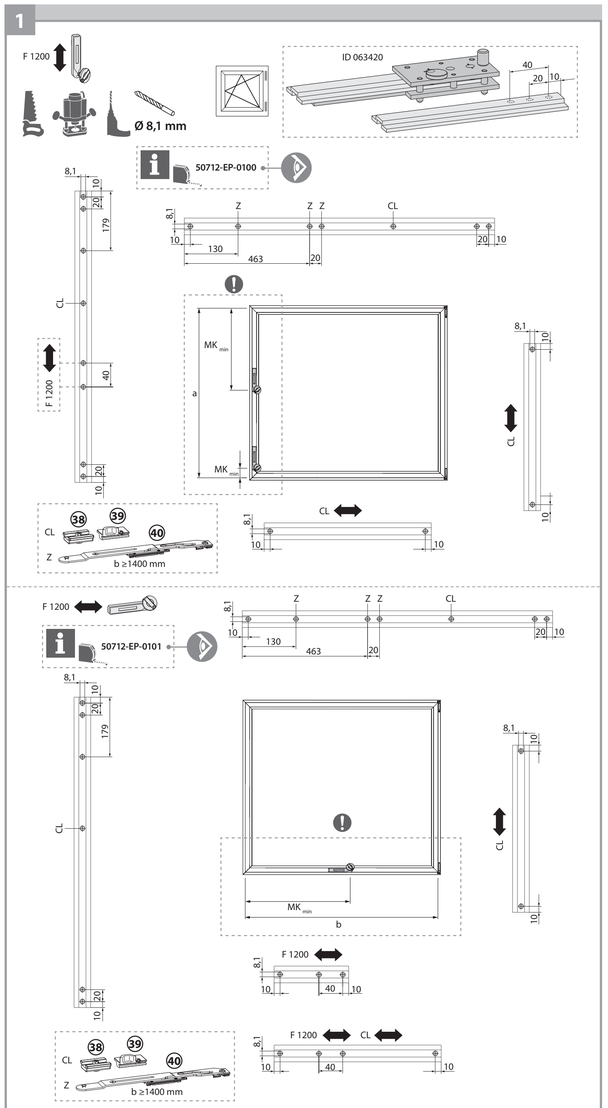

2

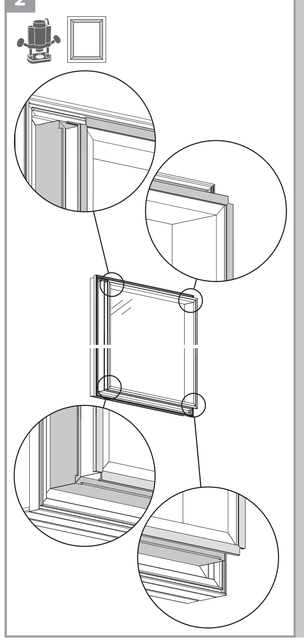

3

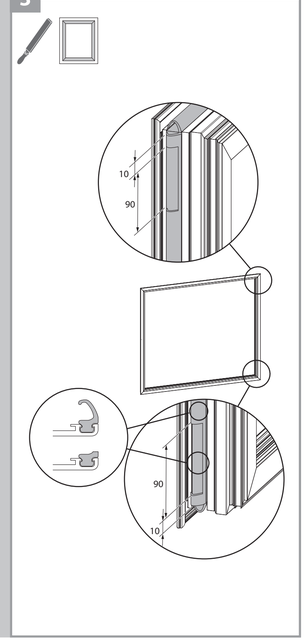

4

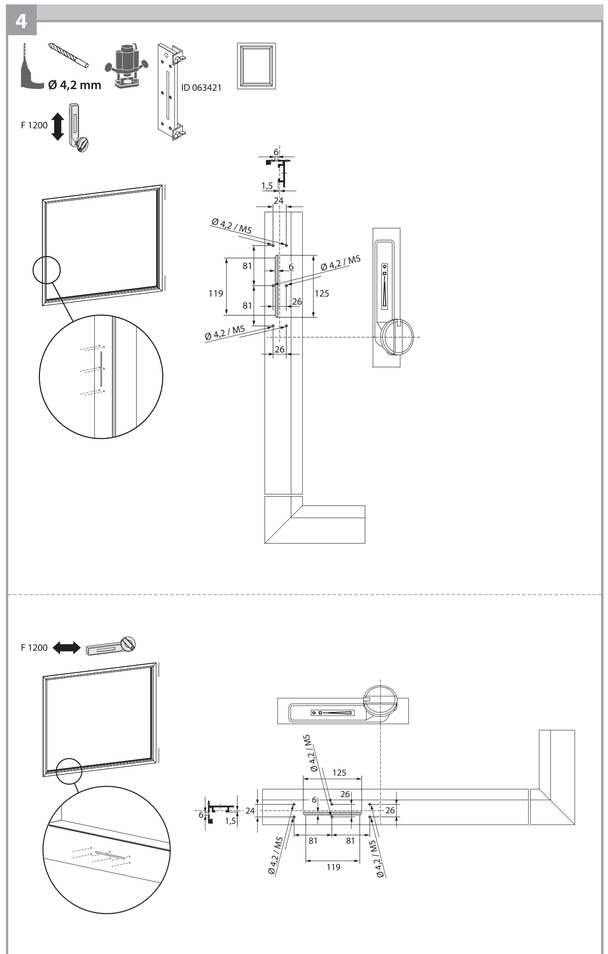

5

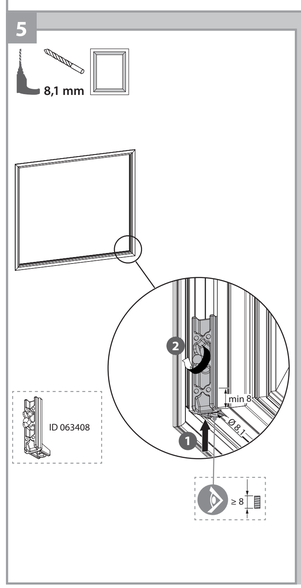

6

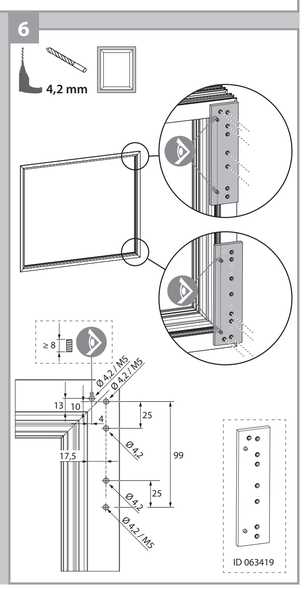

7

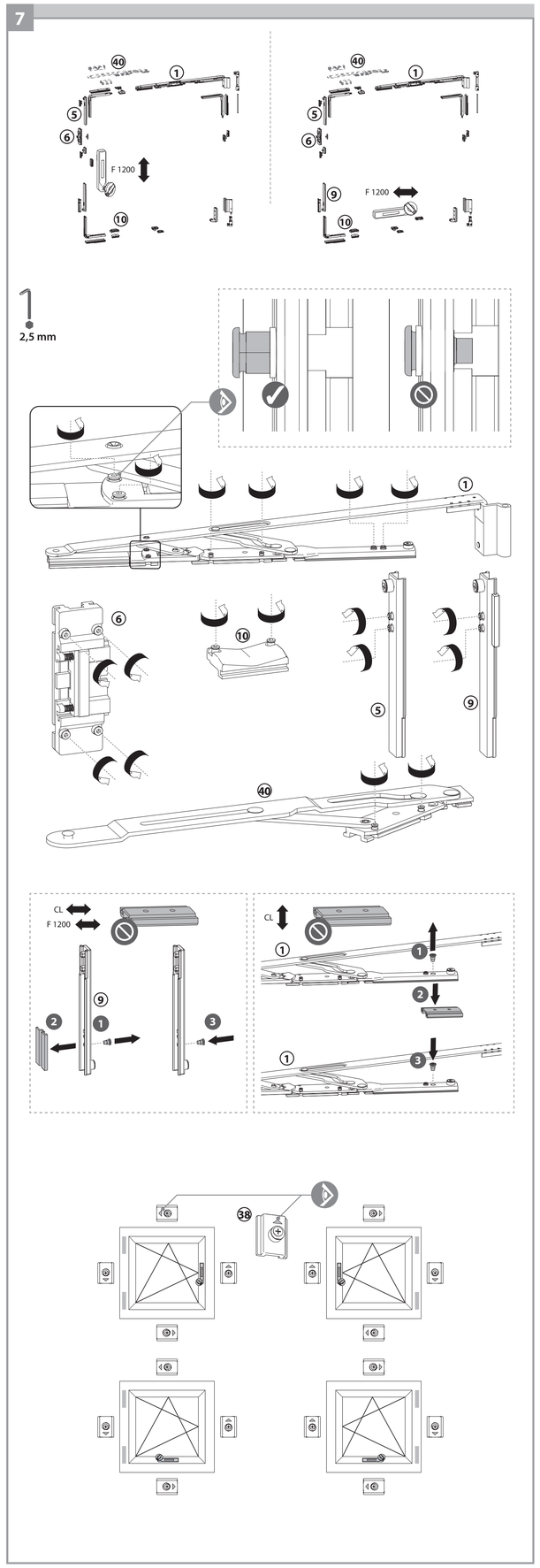

8

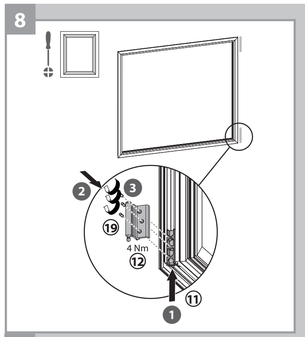

9

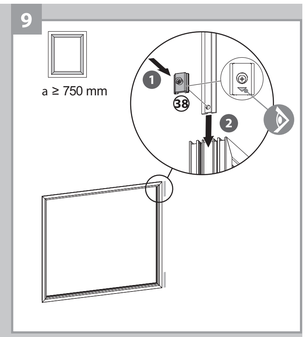

10

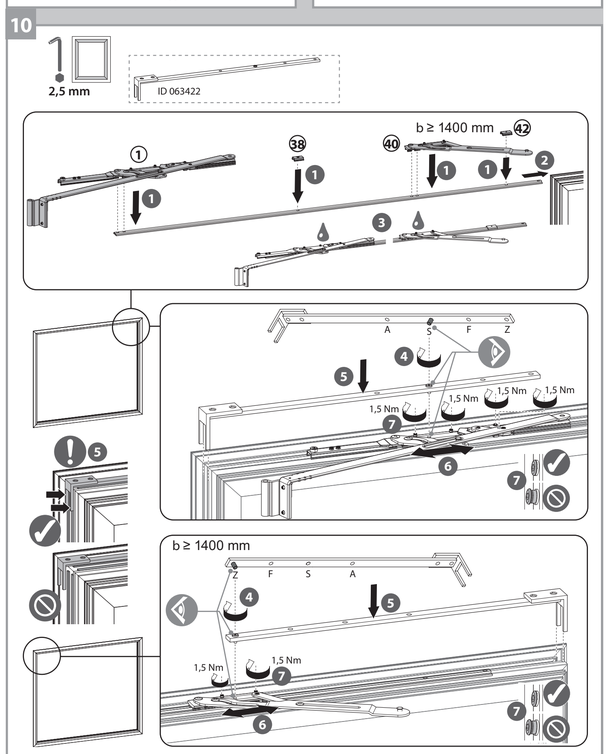

11

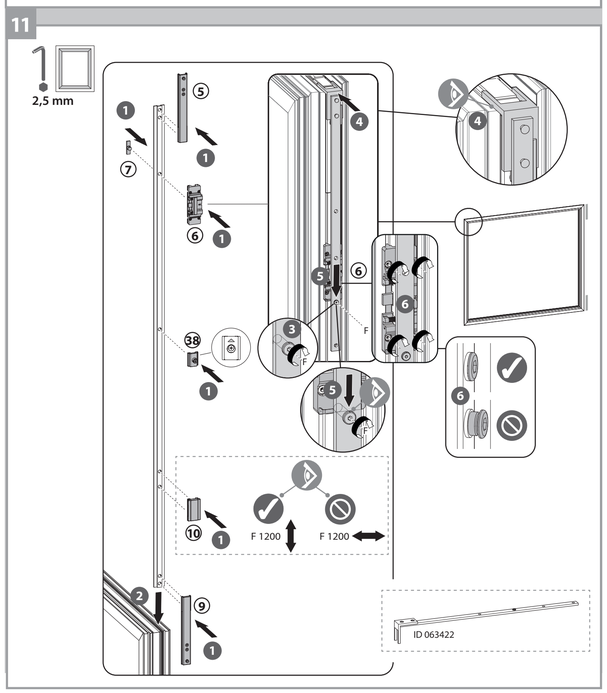

12

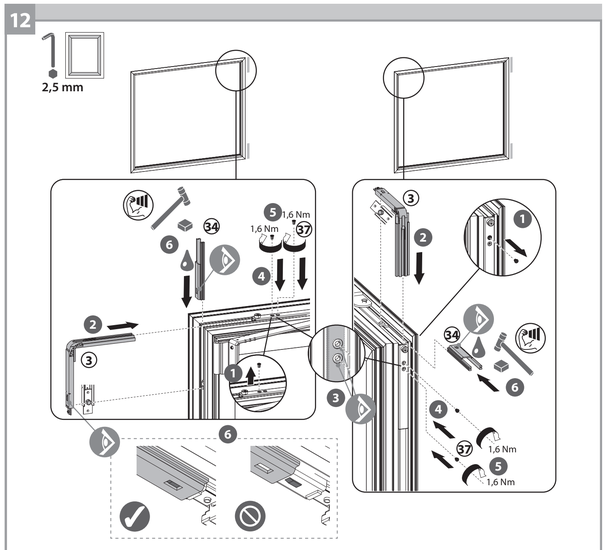

13

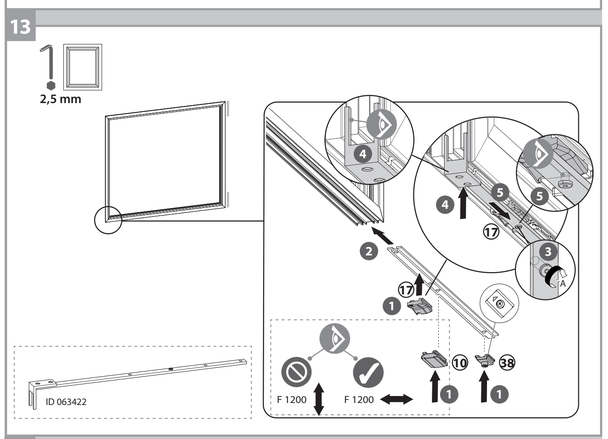

14

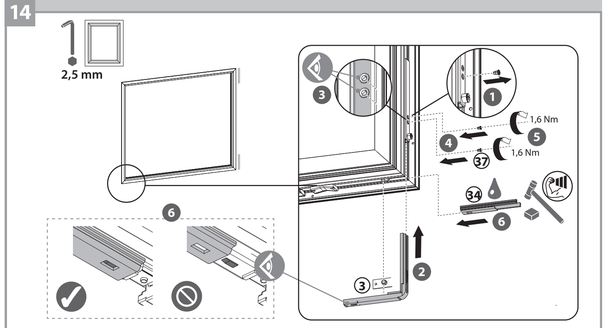

15

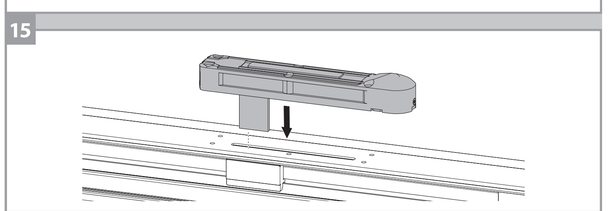

16

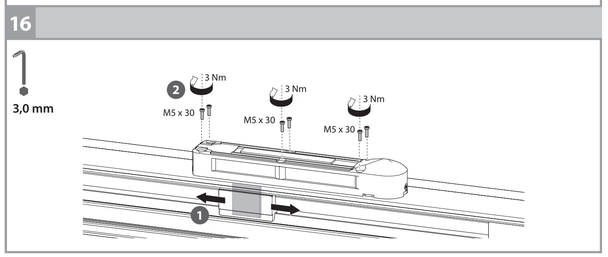

17

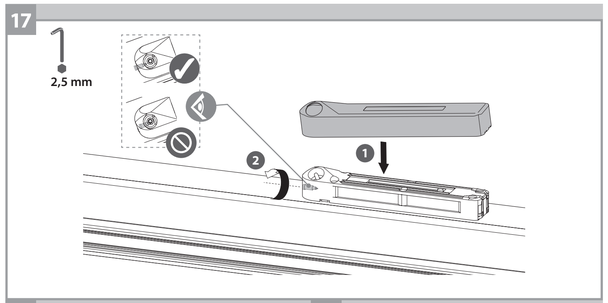

18

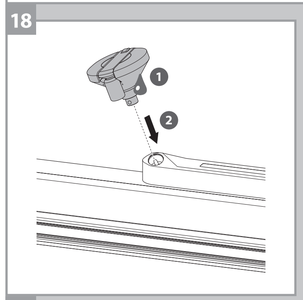

19

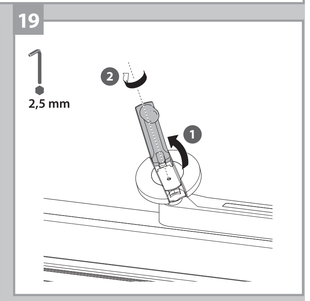

20

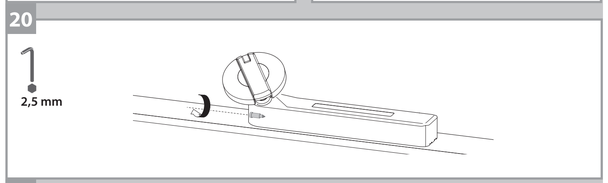

21

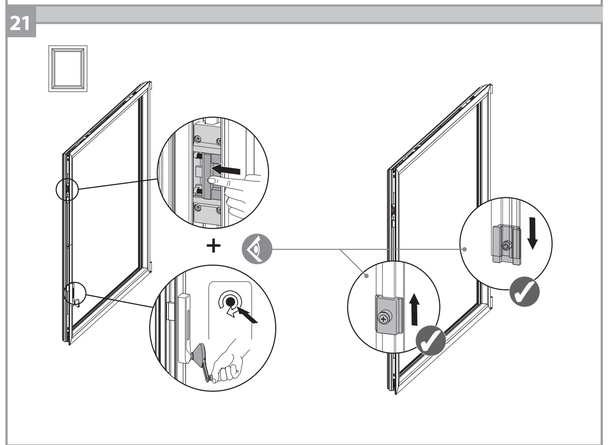

22

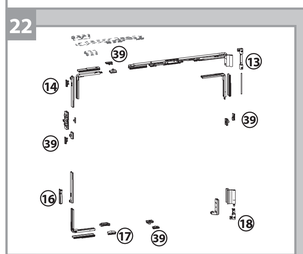

23

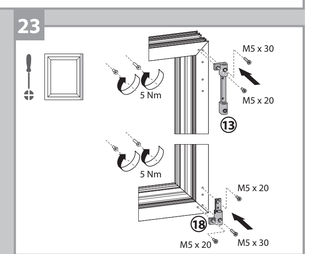

24

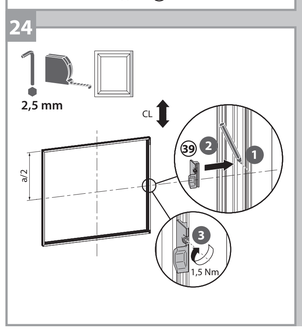

25

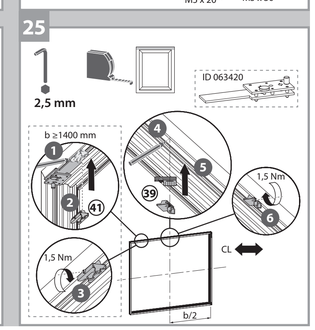

26

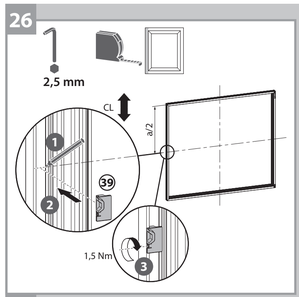

27

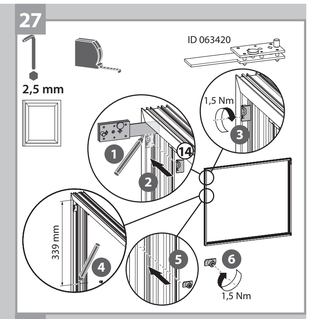

28

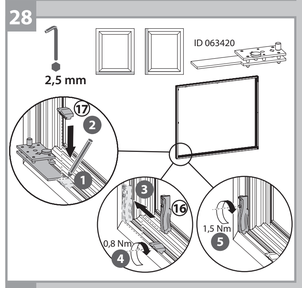

29

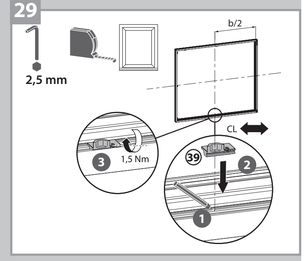

30

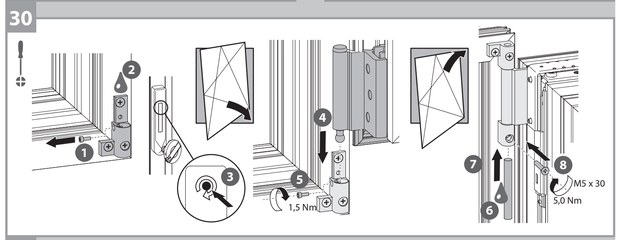

31

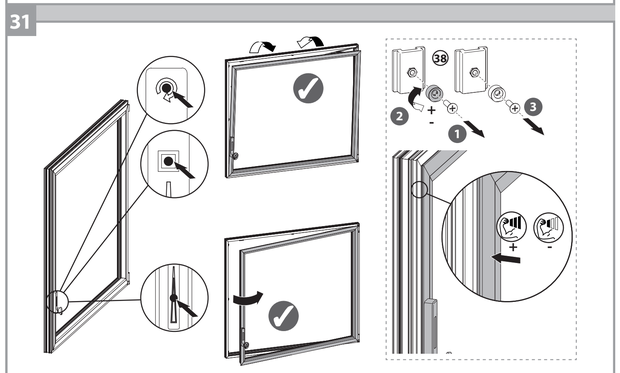

32

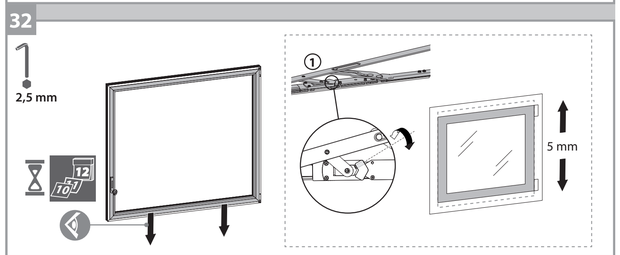

i

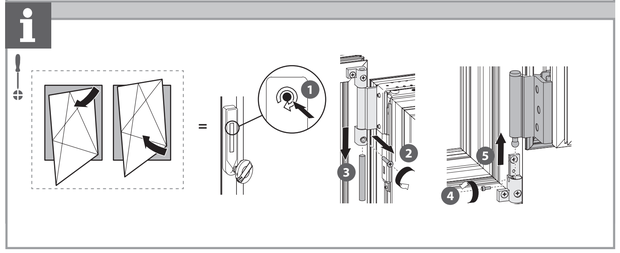

GEZE GmbH
Reinhold-Vöster-Strasse 21–29
71229 Leonberg
Germany

Tel.: 0049 7152 203-0
Fax: 0049 7152 203-310
www.geze.com