DOOR, WINDOW AND SAFETY TECHNOLOGY

Activation devices and sensors

Contents

Overview table	4
Overview: activation devices and sensors	6

ACTIVATION

GC 308 radar movement detector	10
GC 302 radar movement detector	13
GC 307+ proximity switch	16
Air 20-Var active infrared detector	18
Wireless programme	20
Activation button	24
LED sensor switches	26

PROTECTION

GC 342 laser scanner	30
GC 342+ laser scanner	33
GC 344 solid-state scanner	36
GC 338 sensor strip	39
GC 335 sensor strip	42
GC 341 active infrared detector	45
GC 339+ active infrared detector	49

COMBINED DETECTORS

GC 365 combined detector	56
GC 363+ combined detector	60

PROGRAMME SWITCHES AND KEY SWITCHES

Programme switches	66
Key switches	68
Safety switches and emergency push buttons	70

SMOKE SWITCHES AND CONTROL UNITS

RSZ 7 smoke switch control unit	74

ACCESSORIES 78

REFERENCES 82

Overview table

APPLICATION OF ACTIVATION DEVICES ON AUTOMATIC DOOR SYSTEMS AND WINDOWS

	Swing doors	Sliding doors	Curved sliding doors	Revolving doors	Windows
ACTIVATION					
Radar movement detector	●	●	●	●	
AIR light switch	●				
Wireless programme	●	●	●		
Mechanical push buttons	●	●	●		
Sensor switches	●	●	●		
Rotary switch contact	●				
PRESENCE DETECTORS					
Photoelectric barriers		●			
Sensor strips	●			●	
Solid-state scanner	●				
Active infrared light curtains		●	●	●	●
Laser scanner	●			●	●
COMBINED DETECTORS					
Radar including active infrared detector		●	●		
PROGRAMME SWITCHES					
Programme switches	●	●	●	●	
Key switches	●	●	●	●	
Main / safety switches	●	●	●	●	
SMOKE SWITCHES AND CONTROL UNITS					
Smoke switches and control units	●				

● = Yes

Activation devices and sensors

ACTIVATION OF AUTOMATIC DRIVES

For the reliable operation of an automatic door, the choice of the appropriate activation device is of considerable importance. The product range of the GEZE activation devices offers the optimum activation device for every door situation. The GEZE activation devices control and protect all GEZE automatic solutions according to international standards. Supplied from a single source, they enable complete solutions for individual needs.

AUTOMATIC SWING DOOR SYSTEMS

Automatic swing door systems from GEZE ease the opening of a door whenever manual opening is too hard or inconvenient. They are recommended in public as well as in private buildings wherever ease of access, accessibility, safety and hygiene are necessary or where energy has to be saved: in shopping centres, schools, office or industrial buildings, airports, hospitals, vestibules or private homes.

1 = swing door drive | 2 = radar movement detector | 3 = plastic elbow switch
4 = programme switch with key switch | 5 = proximity switch
6 = elbow switch | 7 = LED sensor switch glass | 8 = manual trigger switch
9 = LED sensor foot switch | 10 = laser scanner

AUTOMATIC SLIDING DOOR SYSTEMS

Sliding doors are space-saving, elegant and modern. They are ideal as glass solutions when natural daylight is to be used and visual criteria must be met. With automatic sliding door systems from GEZE, various user scenarios can be realised within one building. In the entrance area, in vestibules or for automating interior doors, the automatic sliding doors from GEZE combine design and universal ease of access. They also meet the demands made on escape and rescue routes.

1 = sliding door drive | 2 = moving leaf | 3 = fixed panel | 4 = combined detector
5 = active infrared detector | 6 = programme switch with key switch
7 = plastic elbow switch | 8 = LED sensor switch glass | 9 = proximity switch
10 = elbow switch | 11 = LED sensor foot switch | 12 = photoelectric barriers

→ **DIN 18650**
The industrial norm DIN 18650 was created to guarantee operators and users of automatic doors optimum safety. GEZE automatic doors as well as activation devices and sensors are type-tested to DIN 18650 and certified.

→ **EN 16005**
The European standard EN 16005 sets out the design specifications and testing methods used to ensure the safe use of automatic doors. The new norm has created a Europe-wide safety standard for automatic doors. All automatic door systems and safety sensors from GEZE meet the EN 16005 standard and are available.

AUTOMATIC REVOLVING DOOR SYSTEMS

The TSA 325 NT drive variant with its customer-specific diameter, as well as height and canopy height, is the focal point of modern façade design – especially in large and representative buildings. Different materials for door leaves and drum walls offer a variety of design options. The revolving door is designed to take heavy loads and is thus the ideal solution for places that have a high frequency of visitors. Thanks to its high insulating effect against weather conditions, it also saves energy and ensures a good, consistent indoor climate.

1= revolving door drive (can alternatively be installed in the floor) | 2 = radar movement detector | 3 = active infrared detector | 4 = emergency stop push button 5 = programme switch with key switch (bollard on-site)

AUTOMATIC CURVED SLIDING DOOR SYSTEMS

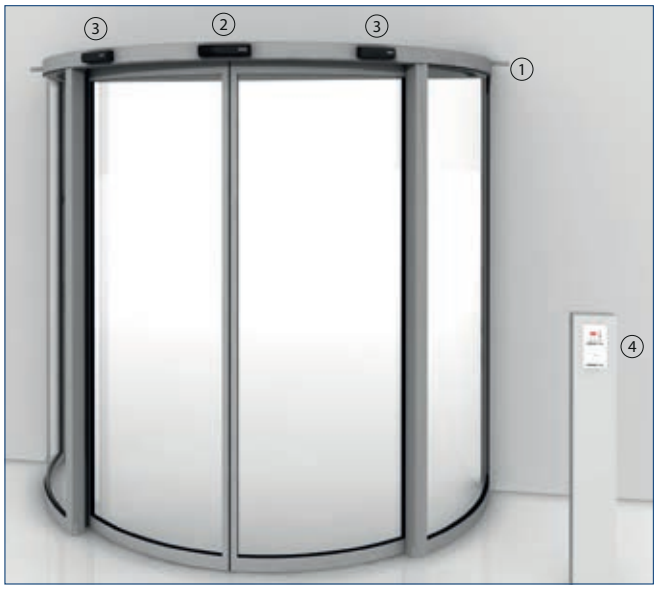

Automatic curved sliding door systems are a function and design element at the same time. Even with small outer dimensions, they create enormous space for the passage. The door systems can be given a convex or concave form and can be connected to the building in several different ways.

1 = sliding door drive | 2 = combined detector | 3 = active infrared detector 4 = programme switch with key switch (bollard on site)

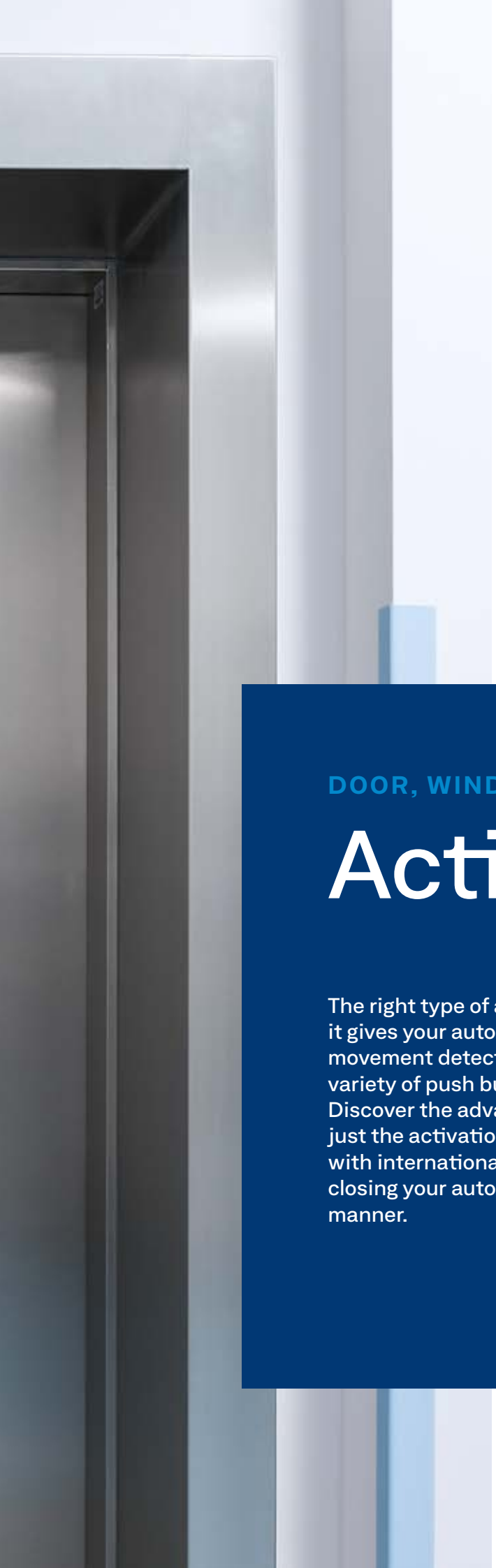

DOOR, WINDOW AND SAFETY TECHNOLOGY

Activation

The right type of activation makes all the difference. Because it gives your automatic door maximum accessibility. Radar movement detectors, wireless activation via radio signal, and a variety of push button and switch variants are available. Discover the advantages of the individual elements. You'll find just the activation type you desire from us, which is in keeping with international standards and guidelines – for opening and closing your automatic door safely and in an energy-efficient manner.

GC 308

Radar movement detector with individual adjustment option for activating automatic doors

AREAS OF APPLICATION

- Activation of automatic swing and revolving doors
- Interior and exterior doors

PRODUCT FEATURES

- Individual settings for challenging environmental conditions
- Configuration possible via push buttons or remote control
- Compact dimensions, suitable for 7 cm profile heights
- Integrated motion tracking also records slow movements
- Movement direction detection and cross-traffic fade-out reduces energy consumption in the building
- Door opening impulse only triggered if needed

TECHNICAL DATA

	GC 308
Technology	Electro-magnetic radar waves
Transmission frequency	24.175 GHz
Operating voltage	12-24 V DC +30% /-10% / 12-24 V AC ± 10%
Operating current	100 mA
Output	Potential-free relay output
Connection type	System plug-type connector
Height	50 mm
Width	120 mm
Depth	50 mm
Installation height (min.)	1800 mm
Installation height (max.)	4000 mm
Connector cable length	2500 mm
Weight	280 g
IP rating	IP54
Service temperature	-20 – 55 °C
Humidity	0-95 % relative, non-condensing
Approvals	RED 2014/53/EU RoHS 2011/65/EU

PRODUCT SCALE DRAWING

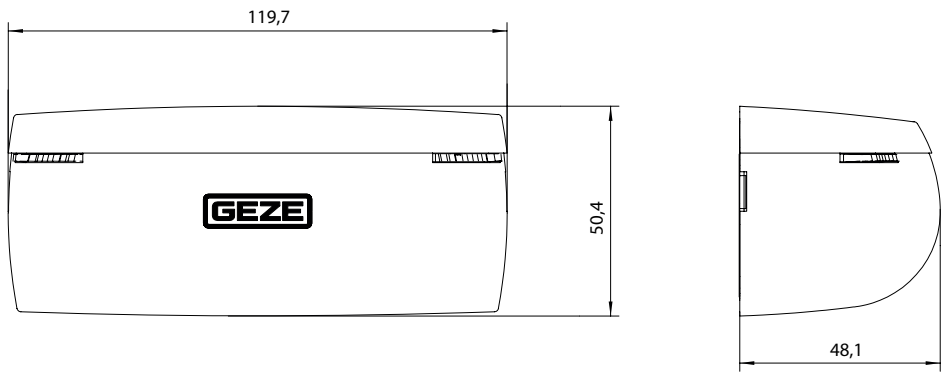

DETECTION AREA AND APPLICATION EXAMPLE

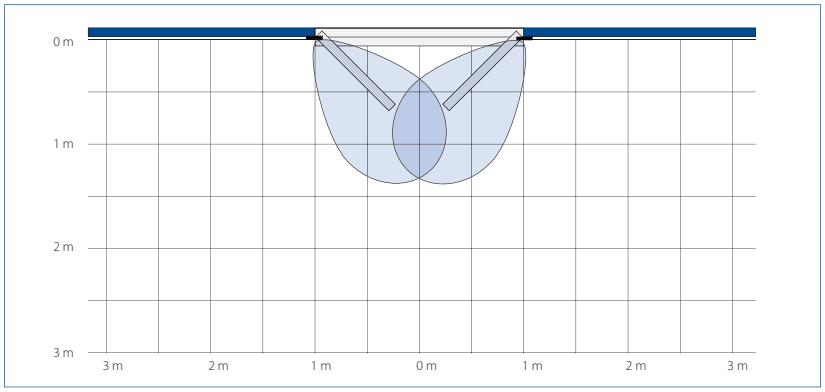

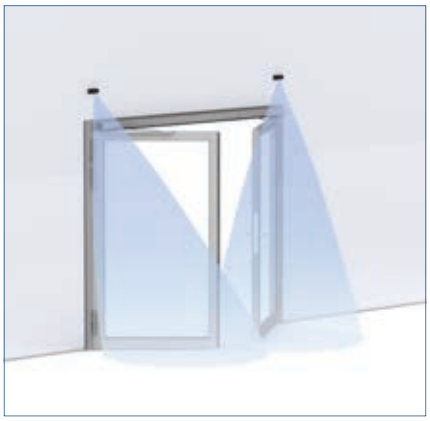

Narrow field (1): min. 0.5 x 0.75 m (B x T), max. 2.0 x 2.5 m (B x T) | **Wide field (2):** min. 1.0 x 0.5 m (B x T), max. 4.0 x 2.0 m (B x T)
Values given measured at installation height of 2.2

DIMENSIONAL DRAWINGS FOR ACCESSORIES

CEILING INSTALLATION KIT FOR GC 308

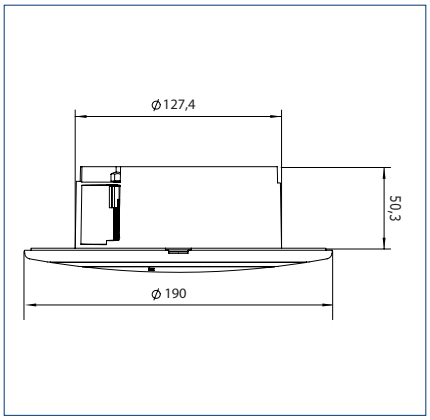

WEATHER HOOD FOR GC 308

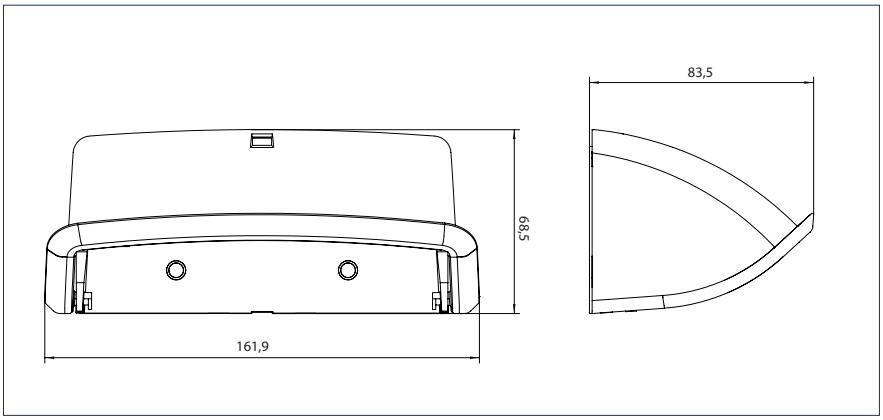

ORDER INFORMATION

Designation	Ausführung	Id.Nr.
GC 308 R radar movement detector Radar movement detector with individual adjustment option for activating automatic doors	black	203603
	white	203604
	stainless steel colour	203605
ZUBEHÖR		
Weather hood GC 308 Protection against precipitation in outdoor use	black	203610
Ceiling installation kit GC 308 Installation kit for integrating the detector in the ceiling	black	203607
	white	203608
Mounting bracket GC 308 For attaching the sensor to the ceiling	black	203609
GC 308 Retrofit Interface For simple and time-saving wiring of the sensor on pre-wired doors (1 packaging unit = 12 pieces)		203627
Remote control for sensors Adjustment and parameter setting of GC 363+, GC 339+, GC 342, GC 342+, GC 307+ and GC 304. Compatible with GC 362, GC 333, GC 333 C, GC 363, GC 339 and ACTIV S GE	black	100061

GC 308 on Revo.PRIME revolving door (photo: GEZE GmbH)

GC 302

Radar movement detector for activating automatic doors

AREAS OF APPLICATION

- Activation of automatic swing, sliding, folding, revolving and curved sliding doors
- Interior and exterior doors

PRODUCT FEATURES

- Convenient commissioning with pre-programmed settings
- Configuration possible via push buttons or remote control
- Clearly defined radar field (narrow or wide field) with reliable detection
- Integrated motion tracking also records slow movements
- Movement direction detection and cross-traffic fade-out reduce energy consumption in the building
- Door opening impulse only triggered if needed

TECHNICAL DATA

	GC 302
Technology	Electro-magnetic radar waves
Transmission frequency	24.125 GHz
Operating voltage	12 – 36 V DC / 12 – 28 V AC
Operating current	approx. 50 mA at 24 V DC
Output	GC 302 R: Potential-free relay output, 48 V AC/DC, 0.5 A AC/1 A DC, 60 VA/30 W Output current present: no detection/no fault, output current < 3 V DC or no current: detection or fault
Connection type	Plug-in screw terminal
Height	62 mm
Width	176 mm
Depth	52 mm
Installation height (max.)	4000 mm
Length connector cable	5000 mm
Weight	150 g
IP rating	IP54
Service temperature	-20 – 60 °C
Humidity	0–90 % relative, non-condensing
Approvals	DIN 18650 / EN 16005

PRODUCT SCALE DRAWING

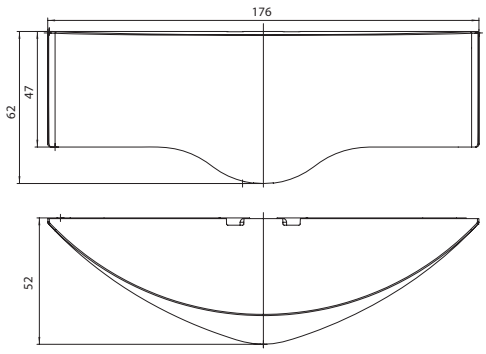

DETECTION AREA AND APPLICATION EXAMPLE

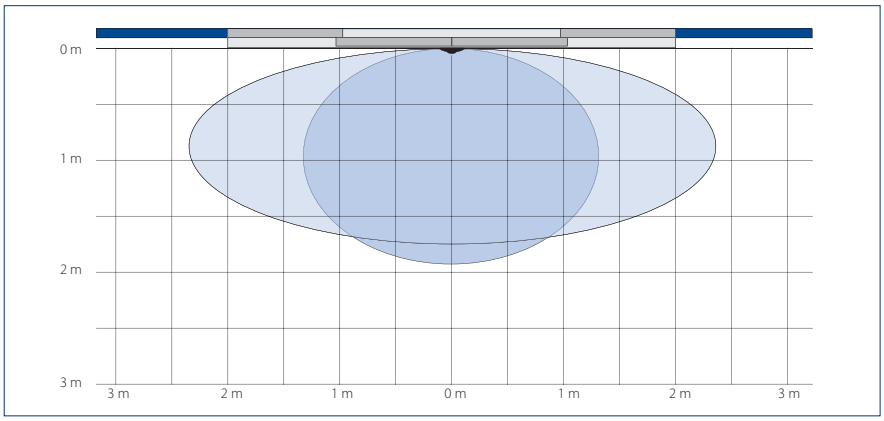

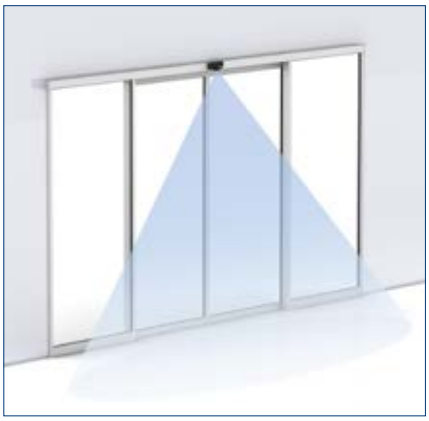

Narrow field (1): min. 0.7 x 0.6 m (W x D), max. 2.7 x 1.9 m (W x D) | **Wide field (2):** min. 1.1 x 0.6 m (W x D), max. 4.7 x 1.7 m (W x D)
Values given measured at installation height of 2.2 m and incline of 35°

DIMENSIONAL DRAWINGS FOR ACCESSORIES

CEILING INSTALLATION KIT FOR GC 302

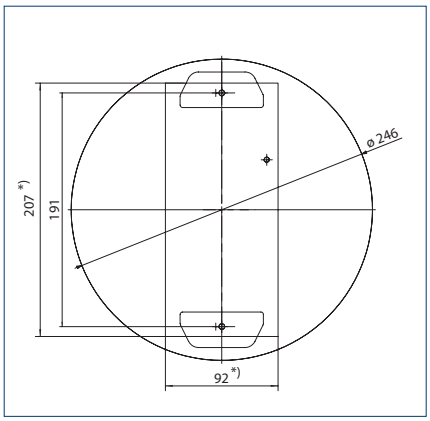

WEATHER HOOD FOR GC 302

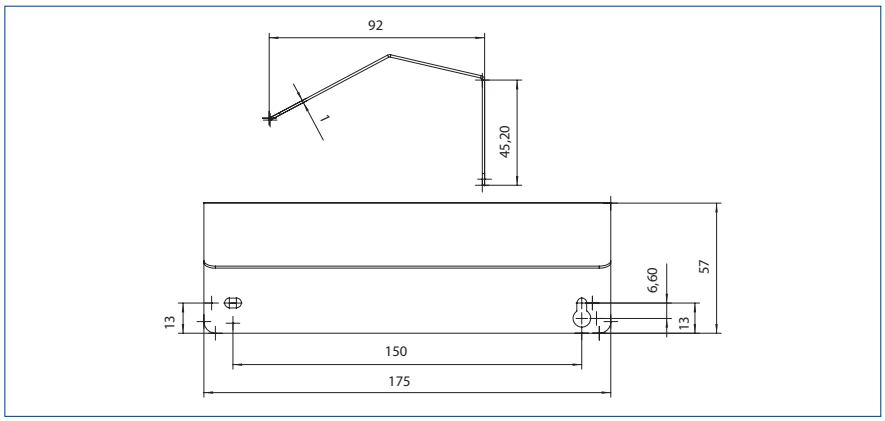

* = Ceiling cut-out

ORDER INFORMATION

Designation	Version	ID no.
GC 302 R radar movement detector Radar movement detector for activating automatic doors	black according to RAL	124087 124088
ACCESSORIES		
Weather hood GC 302 Protection against precipitation in outdoor use	EV1	115339
Ceiling installation kit GC 302 Installation kit for integrating the detector in the ceiling	white	115384
Remote control GC 302 Adjustment and parameter setting of GC 302	red	099575

Deutsche Telekom, Bonn, Germany (photo: Lothar Wels / GEZE GmbH)

GC 307+

Non-contact proximity switch for activating automatic doors

AREAS OF APPLICATION

- Activation of automatic swing, revolving and curved sliding doors
- Interior and exterior doors
- Rooms with high hygiene demands

PRODUCT FEATURES

- Doors can be opened without a need for tactile perception
- External input for LED colour change
- Detects persons and objects in a detection area of 10 – 60 cm
- Scanning ranges adjustable to make environmentally and user-specific adjustments
- Hand-height isntallation ensures convenient, bacteria-free access
- Can also be installed behind tiles or glass
- Adjustable via DIP switches and remote control: acoustic feedback, LED colours, LED animations, pulse/toggle mode
- Toilet control function for locking and automatic unlocking of toilets

TECHNICAL DATA

	GC 307+
Technology	Electro-magnetic radar waves
Output	Electric relay
IP rating	IP65
Type of connection	Screw terminal
Scanning range adjustment	vie DIP switch, via remote control
Installation height	at hand level
Transmission frequency	24.15 GHz
Service temperature	-20 °C - 55 °C
Approvals	RED 2014/53/EU, RoHS 2011/65/EU

PRODUCT SCALE DRAWING

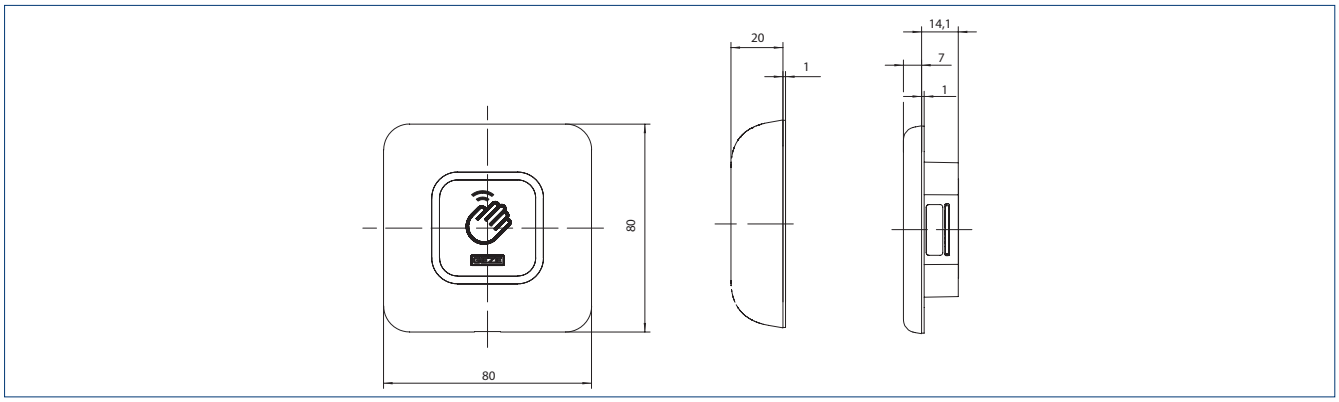

DETECTION AREA AND APPLICATION EXAMPLE

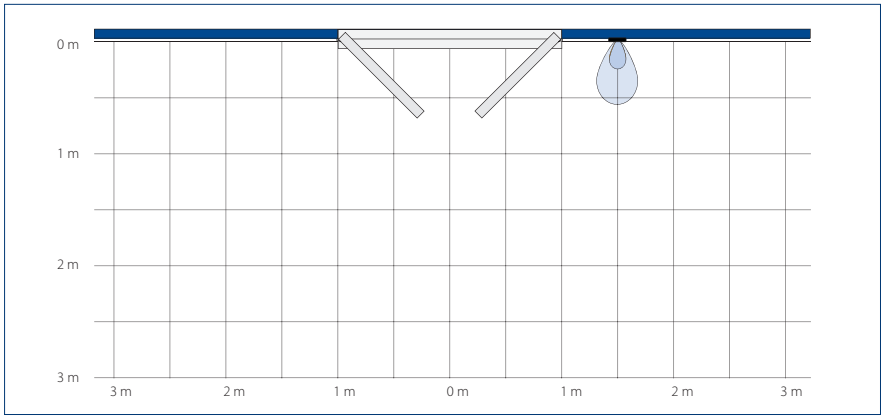

Detection range: 10–60 cm

ORDER INFORMATION

Designation	Type of installation	Version	ID no.
GC 307+ (hand icon) Proximity switch to activate automatic doors	flush-mounted	alpine white	193226
	surface-mounted	alpine white	195727
GC 307+ (WC icon) Proximity switch to activate automatic doors Suitable for Powerturn, EMD and standard sliding doors	flush-mounted	alpine white	195750
	surface-mounted	alpine white	195751

AIR 20-Var

Light switch for monitoring the door handle of automatic swing doors

AREAS OF APPLICATION

- Door handle monitoring for activation of automatic swing doors
- Presence detector for persons or objects in small areas
- Occupied checks in personal and security interlocking door systems

PRODUCT FEATURES

- Active infrared light sensor
- Scanning range variably adjustable from 1.2 – 2.2 m

TECHNICAL DATA

	AIR 20-Var
Technology	Active infrared beams
Operating voltage	12 – 30 V DC / 18 – 28 V AC
Operating current	approx. 50 mA
Output	Potential-free relay output, 48 V AC/DC, 0,5 A AC / 1 A DC, 55 VA / 24 W, switching type: light switching (output contact closed on detection)
Connection type	Plug-in screw terminal
Height	66 mm
Width	72 mm
Depth	49 mm
Scanning range adjustment	1.2 – 2.2 m
Installation height (min.)	1200 mm
Installation height (max.)	2200 mm
Length connector cable	5000 mm
Light beam cross-section	60 x 60 mm
IP rating	IP52
Service temperature	-20 – 60 °C
Humidity	< 90 % relative, non-condensing
Approvals	CE according to EMC Directive 89/336 EEC

PRODUCT SCALE DRAWING

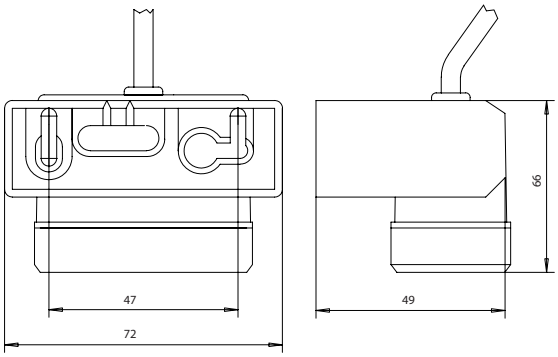

DETECTION AREA AND APPLICATION EXAMPLE

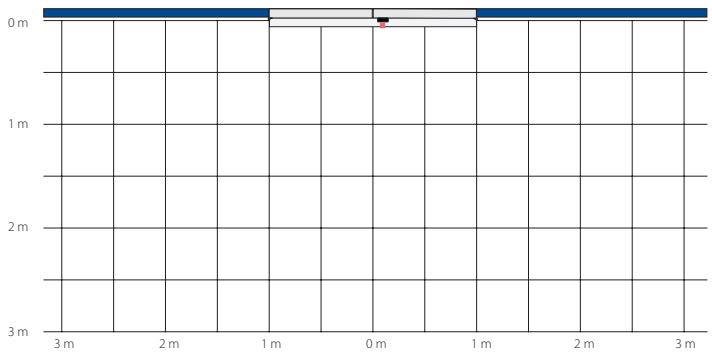

0.06 x 0.06 m (W x D) | Values given measured at a scanning range of 1.3 m

ORDER INFORMATION

Designation	Version	ID no.
AIR 20-Var Light switch for monitoring the door handle of automatic swing doors	black	082689

Wireless programme

WTH-1 remote control

WTH-2 remote control

WTH-4 remote control

Wireless activation with system – reliable, convenient and safe at the touch of a button

AREAS OF APPLICATION FOR TRANSMITTERS

- Transmission frequency 433.93 MHz
- Safe encryption of radio signals using rolling code (approx. 74 trillion code combinations)
- Radio range up to 30 m inside the building
- LED function display for battery and transmission check
- Universal use for doors, windows and smoke and heat extraction systems which can be wirelessly activated individually, together or in groups within one system design

AREAS OF APPLICATION FOR RECEIVERS

- Simple teach-in of the transmitters via learn button with acoustic feedback
- Up to 85 transmitters on the WRM receiving module can be taught-in; up to 12 transmitters can be taught-in on the WRB-5 radio reception board
- DIP switches for selecting receiver mode of operation (pulse mode, pulse and permanent mode, dead man's mode, self-adjusting mode)
- Tiniest housing dimensions for integrated installation within the drive or a flush-mounted box
- IP54 surface-mounted version for protected outdoor use
- 2 outputs for individual connection possibilities

WTM transmitting module

WRM-24 receiving module

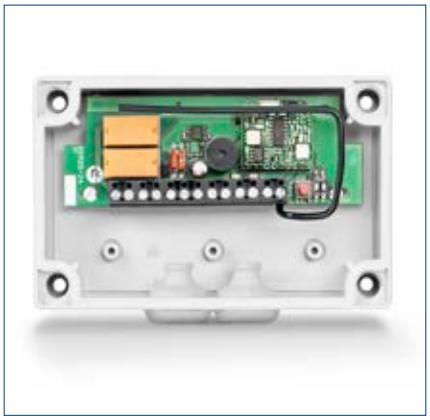

WRM-24B receiving module in IP-54 housing

WRM-230 receiving module

WRM-230B receiving module in IP-54 housing

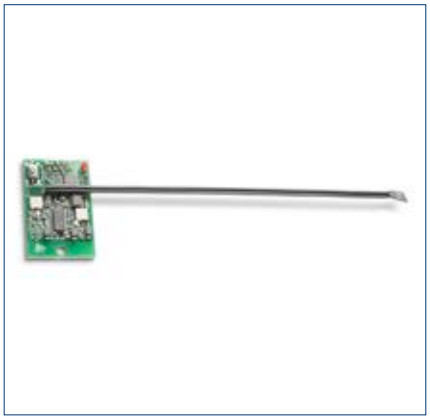

WRB-5 radio reception board

TECHNICAL DATA

	WTH-1 remote control	WTH-2 remote control	WTH-4 remote control
Specifications	incl. wall bracket	incl. wall bracket	incl. wall bracket
Version	1 channel	2 channels	4 channels
IP rating	IP54	IP54	IP54
Dimensions	78 x 51 x 15 mm	78 x 51 x 15 mm	78 x 51 x 15 mm
Battery	12 V, 45 mAh A235	12 V, 45 mAh A235	12 V, 45 mAh A235
Battery life cycle	30,000 operations	30,000 operations	30,000 operations

	WTM transmitting module	WRM-24 receiving module	WRM-24B receiving module in IP-54 housing
Specifications	incl. 3 connector cables incl. protective casing (can be clipped in KFT elbow switch)	2 outputs, relay contact 100 mA, 48 V	2 outputs, relay contact 100 mA, 48 V
Version		Flush-mounted (UP)	Surface-mounted (AP)
IP rating	IP20	IP20	IP54
Dimensions	44 x 30 x 11 mm	52 x 47 x 23 mm	130 x 80 x 35 mm
Battery	3 V, 150 mAh CR2032		
Battery life cycle	50,000 operations		
Current consumption		24 V, 12.5 mA in standby	24 V, 12.5 mA in standby

	WRM-230 receiving module	WRM -230B receiving module in IP-54 housing	WRB-5 radio reception board
Specifications	2 outputs, 5 A, 230 V relay contact	2 outputs, 5 A, 230 V relay contact	2 outputs, for clipping onto the DCU control unit
Version	Flush-mounted (UP)	Surface-mounted (AP)	Circuit board (for clipping into the control unit)
IP rating	IP20	IP54	
Dimensions	52 x 47 x 23 mm	130 x 80 x 35 mm	44 x 27 x 10 mm
Current consumption	230 V, 3.9 mA in standby mode	230 V, 5.6 mA in standby mode	5 V, 6 mA in standby mode

APPLICATION MATRIX FOR WIRELESS PROGRAMME

	ECdrive T2 Slimdrive Powerdrive	Slimdrive EMD	Powerturn ECturn	E 260 control panel	Window drive
Pulse signal	WRM-24, WRM-24B	WRM-24, WRM-24B	WRB-5		
Pulse and permanent signal	WRM-24, WRM-24B	WRM-24, WRM-24B	WRB-5		
Operation with latching				WRM-24, WRM-24B	WRM-230, WRM-230B
Operation without latching				WRM-24, WRM-24B	WRM-230, WRM-230B

ORDER INFORMATION

Designation	Version	ID no.
Remote control	WTH-1 WTH-2 WTH-4	131209 131210 131211
Transmitting module	WTM	131212
KFT elbow switch	white, surface-mounted niro, surface-mounted	114078 114077
Backplate for KFT elbow switch	white stainless steel	131219 131220
LS990 elbow switch	surface-mounted flush-mounted	128582 128583
LTA24-AZ vent switch	flush-mounted	129393
Receiving module	WRM-24 WRM-230	131213 131215
Receiving module in the IP54 housing	WRM-24B WRM-230B	131214 131216
Radio reception board	WRB-5	135170

Installation situation (photo: Studio BE / GEZE GmbH)

Activation switches and push buttons

Plastic elbow switch

LS990 stainless steel elbow switch

Elbow switch stainless steel IP65

Plastic rocker push button AS 500

LS990 stainless steel rocker push button

Pull button

Activation switches and push buttons for a wide range of different needs for the opening and closing of automatic doors

AREAS OF APPLICATION

→ Activation of automatic swing, sliding, folding, revolving and curved sliding doors

TECHNICAL DATA

	Elbow switch plastic	Elbow switch LS990 stainless steel	Elbow switch stainless steel	Rocker push button plastic AS 500
Specifications	- 1-pole normally open contact - Switching voltage: max. 24 V DC - Switching current: max. 1 mA	- 1-pole normally open contact - Switching voltage: max. 230 V AC - Switching current: max. 10 A	- 1-pole changeover contact - Switching voltage: max. 230 V AC - Switching current: max. 1 A	- 1-pole normally open contact - Switching voltage: max. 230 V AC - Switching current: max. 10 A
Version	surface-mounted	flush-/surface-mounted	surface-mounted	flush-/surface-mounted*
IP rating	IP30 / IP67*	IP30	IP65	IP20
Dimensions	90 x 180 x 23 mm	81 x 223 x 18 mm (flush-mounted) 81 x 223 x 51 mm (surface-mounted)	75 x 250 x 17 mm	80 x 80 x 9 mm (flush-mounted)
ACCESSORIES	**– *1-pole changeover contact IP67, ID no. 114156** **– Rear panel, ID no. 131219 (white) ID no. 131220 (stainless steel)** **– WTM transmitting module 131212**	**– WTM transmitting module 131212**		**– *Surface-mounted box, ID no. 120503**
ID no.	114078 (white) 114077 (stainless steel)	141042 (flush-mounted, white) 141041 (surface-mounted, white) 128583 (flush-mounted, stainless steel) 128582 (surface-mounted, stainless steel)	119898	120888

	Rocker push button LS990 stainless steel	Pull button
Specifications	- 1-pole normally open contact - Switching voltage: max. 230 V AC - Switching current: max. 10 A	- Contact system: 1 electric strike normally closed contact / 1 normally opened contact - Switching voltage: max. 230 V DC - Switching current: max. 10 mA
Version	flush-mounted	incl. pull line (length 1 m)
IP rating	IP20	IP65
Dimensions	81 x 81 x 11 mm	36 x 94 x 34 mm
ACCESSORIES		
ID no.	098396	008607

LED sensor switches

LED sensor switch

LED sensor switch glass

LED sensor switch 20 mm

LED sensor foot switch

Capacitive switches for opening and closing automatic doors with high hygiene demands

AREAS OF APPLICATION

- Activation of automatic doors
- Can be used inside and outside
- Use in restaurant and catering sector for foot activation

TECHNICAL DATA

	LED sensor switch	LED sensor switch glass	LED sensor foot switch	LED sensor switch 20 mm
Specifications	– PNP/NPN normally open contact – Switching voltage: max. 24 V DC – Switching current: max. 400 mA – Current consumption: max. 35 mA at 24 V	– PNP/NPN normally open contact – Switching voltage: max. 24 V DC – Switching current: max. 400 mA – Current consumption: max. 35 mA at 24 V	– PNP normally open contact – Switching voltage: max. 24 V DC – Switching current: max. 400 mA – Power consumption: max. 30 mA at 24 V	– PNP normally open contact – Switching voltage: max. 24 V DC – Switching current: max. 400 mA – Current consumption: max. 20 mA at 24 V
Version	Flush-mounted	Flush-mounted	Flush-mounted	Flush-mounted
IP rating	IP69	IP69	IP69K	IP69K
Dimensions	Ø 100 mm	Ø 100 mm	100 × 100 mm	Ø 28.5 mm
ACCESSORIES	**– Flat mounting ring, ID no. 139009** **– High mounting ring, ID no. 139010**	**Mounting ring, ID no. 184805**	**Base assembly, ID no. 182941**	**–**
ID no.	137529	143412	182936	143273

Installation situation (photo: GEZE GmbH)

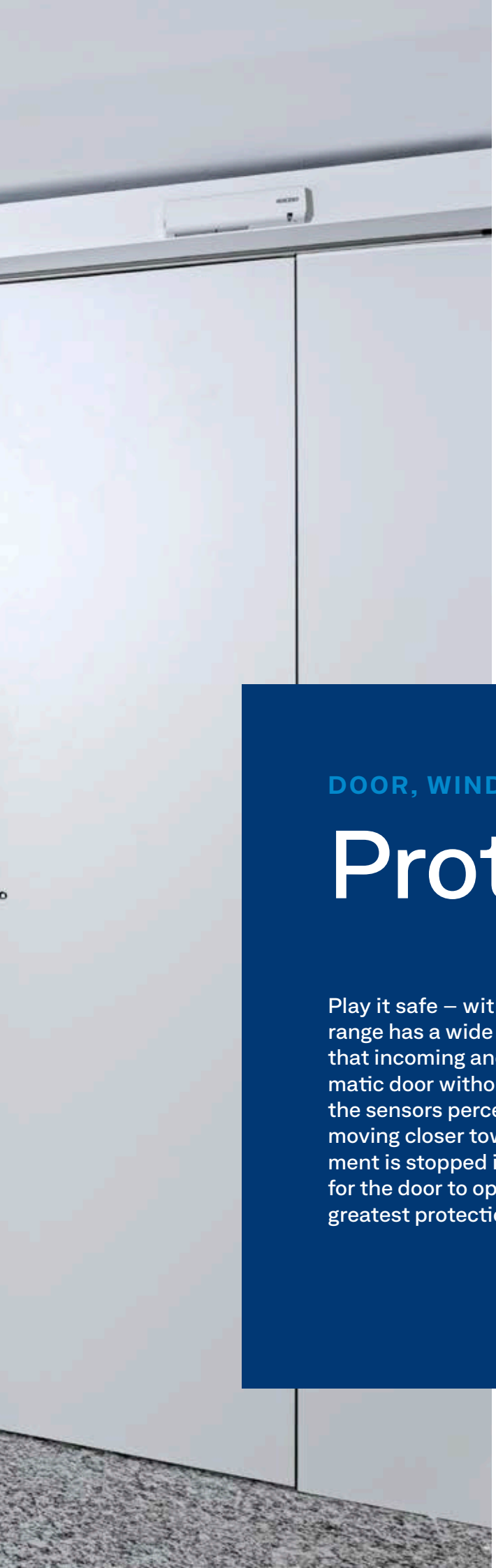

DOOR, WINDOW AND SAFETY TECHNOLOGY

Protection

Play it safe – with our presence detectors. Our GEZE product range has a wide range of sensors for protection available, so that incoming and outgoing people can pass through your automatic door without danger. Thanks to infrared technology, the sensors perceive obstructions – be they people or objects – moving closer towards the door. If the door is opening, the movement is stopped immediately. If it is closing, the sensors arrange for the door to open again via the drive. This means that the greatest protection possible is available.

GC 342

VIDEO

Laser scanner for the protection of automatic doors and windows with integrated object and wall blanking

AREAS OF APPLICATION

- Protection of automatic swing and revolving doors
- Interior and exterior doors
- Use on doors up to 1600 mm leaf width
- Complicated flooring, such as reflective floors, entrance mats, metal rails
- Use on doors with continuous vertical pull handle
- Protection of the main and secondary closing edges on automated windows

PRODUCT FEATURES

- Compact and space-saving safety sensor
- Narrow detection area secures door leaf widths up to max. 1600 mm
- Integrated object and wall blanking near maximum door opening
- Protection area on the main closing edge is automatically expanded depending on the door angle
- Automatized teaching of the system with the push of a button
- Avoidance of hazards at pinching and shearing edges on automated windows

TECHNICAL DATA

	GC 342
Technology	Laser scanner, light travel time measurement
Operating voltage	24 V DC ± 15%
Output	Transistor output, max. 42 V DC, max. 100 mA
Height	86 mm
Width	143 mm
Depth	40 mm
Installation height (min.)	1500 mm
Installation height (max.)	3870 mm
Length connector cable	2500 mm
Response time	Door leaf protection: < 50 ms / finger protection range: < 90 ms
IP rating	IP54
Service temperature	-30 – 60 °C
Humidity	0–95 % relative, non-condensing
Approvals	DIN 18650, EN 16005

PRODUCT SCALE DRAWING

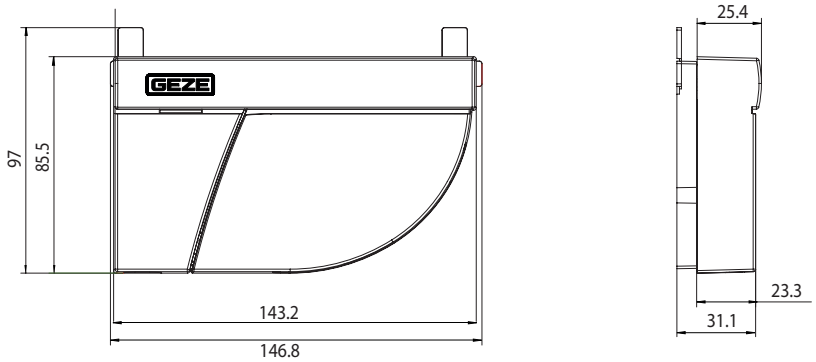

DETECTION AREA AND APPLICATION EXAMPLE

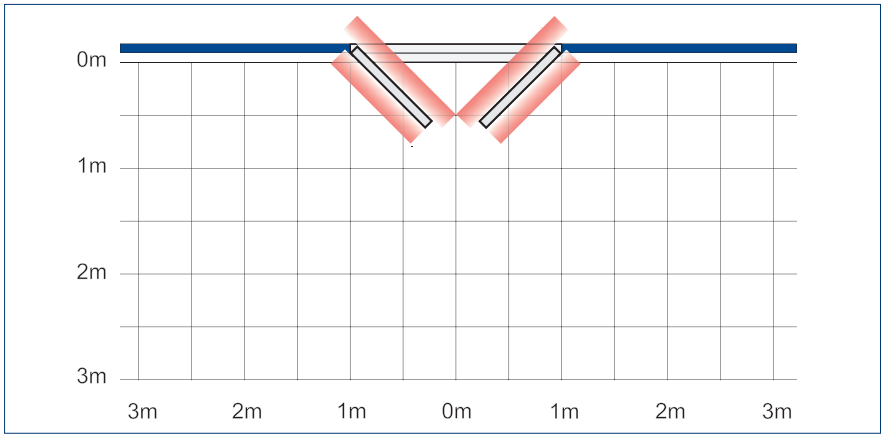

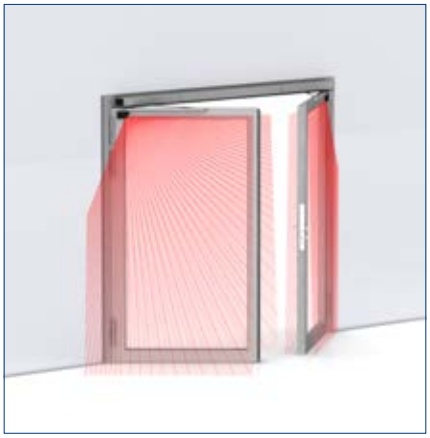

Protection range: 1.0 m at an installation height of 3.87 m, 1.6 m at an installation height of 3.65 m I Depending on the building and door situation, a finger protection shutter may be necessary if people in need of protection are to use the automatic door safely, and in conformity with standards!

ORDER INFORMATION

Designation	Version	ID no.
GC 342 Kit comprising two sensors for protecting the swivelling range of automatic swing doors in accordance with DIN 18650 / EN 16005	white RAL 9016 black stainless steel colour	167439 167438 167440
GC 342 (left module) comprising one sensor for protecting the swivelling range (DIN left) of automatic swing doors in accordance with DIN 18650 / EN 16005	white RAL 9016 black stainless steel colour	167433 167432 167434
GC 342 (right module) comprising one sensor for protecting the swivelling range (DIN right) of automatic swing doors in accordance with DIN 18650 / EN 16005	white RAL 9016 black stainless steel colour	167436 167435 167437

ACCESSORIES

GC 342 fire protection kit Enables a smaller drill hole diameter for the master/slave connecting cable For fire protection doors, you need to check with the door constructor if the door can be drilled through, for testing certification reasons.		189384
GC 342 retrofit interface For wiring the GC 342 to prefabricated doors		189422

experimenta Science Centre, Heilbronn, Germany (photo: Jürgen Pollak / GEZE GmbH)

GC 342+

VIDEO

Laser scanner for the protection of automatic doors and windows with integrated object and wall blanking

AREAS OF APPLICATION

- Protection of automatic swing doors, especially for the secondary closing edge
- Interior and exterior doors
- Use on doors up to 1600 mm leaf width
- Complicated flooring, such as reflective floors, entrance mats, metal rails
- Use on doors with continuous vertical pull handle

PRODUCT FEATURES

- Compact and space-saving safety sensor
- Narrow detection area secures door leaf widths up to max. 1600 mm
- Integrated object and wall blanking near maximum door opening
- Protection area on the main closing edge is automatically expanded depending on the door angle
- Automatized teaching of the system with the push of a button
- Avoidance of hazards at pinching and shearing edges on automated windows
- Four laser curtains secure a large area, and prevent the door from closing if there is anybody within the door frame, wenn sich jemand unter der Türzarge befindet
- Laser curtains can be used for non-contact door control via an output signal

TECHNICAL DATA

	GC 342+
Dimensions	145 x 88 x 68 mm
Technology	Laser scanner, light travel time measurement
Number of protection curtains	4 pc.
Output	3 potential-free relay contacts
IP rating	IP44
Connector cable length	2500 mm
Installation height (min.)	1500 mm
Installation height (max.)	3870 mm
Response time	typical < 120 ms / max. 220 ms (curtain 2)
Service temperature	-25 °C 60 °C
BACnet ability	No
Humidity	0-95 % relative, non-condensing
Approvals	DIN 18650, EN 16005

PRODUCT SCALE DRAWING

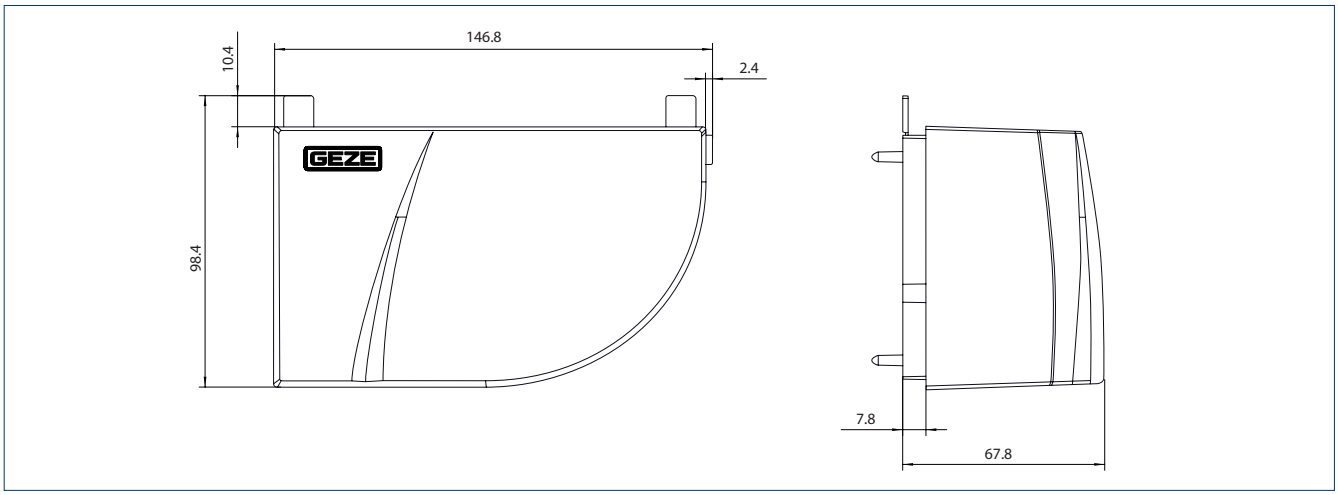

DETECTION AREA AND APPLICATION EXAMPLE

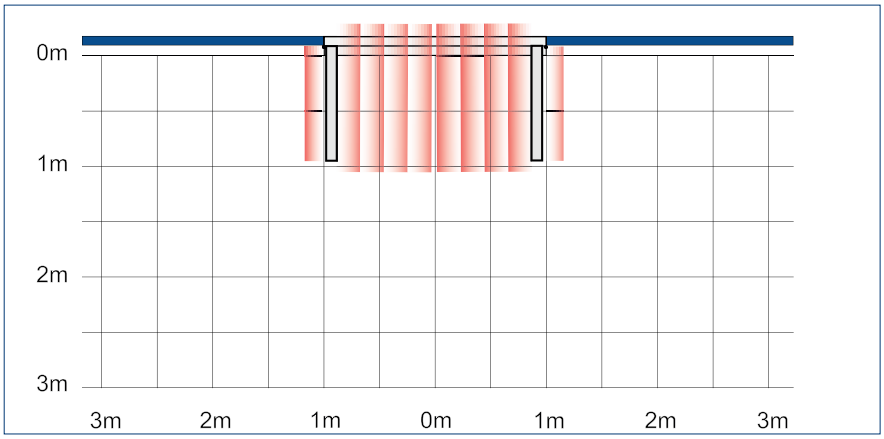

Protection range: 1.0 m at 3.87 m installation height, 1.6 m at 3.65 m installation height

ORDER INFORMATION

Designation	Version	ID no.
GC 342+ (left module) Laser scanner with four laser curtains for optimum protection of the hazardous areas – including the secondary closing edge – of automatic swing doors; additional output for non-contact activation consisting of a sensor module, cable, and accessories	white RAL 9016 black stainless steel colour	198671 198669 198693
GC 342+ (right module) Laser scanner with four laser curtains for optimum protection of the hazardous areas – including the secondary closing edge – of automatic swing doors; additional output for non-contact activation consisting of a sensor module, cable, and accessories	white RAL 9016 black stainless steel colour	198692 198670 198694
ACCESSORIES		
GC 342+ retrofit interface For simple and time-saving retrofitting of the sensor on pre-wired door systems. Also compatible with the GC 344 sensor.		199498
GC 342+ fire protection adapter Including door connection cable BS/BGS. Reduces the necessary borehole diameter from 10 mm to 5 mm		210921

GC 344

Solid-state scanner for the protection of automatic swing doors with dynamic adjustment of the protective field

AREAS OF APPLICATION

- Protection of automatic swing doors
- Interior and exterior doors
- Use on doors up to 1800 mm leaf width
- Complicated flooring, such as reflective floors, entrance mats, metal rails
- Use on doors with continuous vertical push-bar

PRODUCT FEATURES

- Compact and space-saving safety sensor
- Closely monitored detection area secures leaf widths up to 1800 mm (depending on installation height)
- Dynamic adjustment of the protective field depending on the door angle
- Protection area on the main closing edge is automatically expanded depending on the door angle
- Automatized teaching of the system with the push of a button
- Protection of the secondary closing edge by curving the beam field around the secondary closing edge
- Silent operation without moving parts

TECHNICAL DATA

	GC 344
Dimensions	255 x 61.3 x 38.7 mm
Technology	Solid-state scanner, time-of-flight measurement
Operating voltage	24 V DC ± 20 %
Switching voltage	30 V DC
Switching current	60 mA
Output	2 potential-free relay contacts
IP rating	IP65
Connector cable length	2500 mm
Adjustability	pushing a button
Installation height (min.)	1500 mm
Installation height (max.)	3000 mm
Installation height	1500 up to 2500 mm (0.8 m up to 1.8 m door leaf) 2500 up to 3000 mm (0.8 m up to 1.6 m door leaf)
Response time	< 50 ms for installation height < 2500 mm < 80 ms for installation height > 2500 mm
Service temperature	-30 - 60 °C
Humidity	25-95 %, non-condensing
Approvals	DIN 18650, EN 16005

PRODUCT SCALE DRAWING

DETECTION AREA AND APPLICATION EXAMPLE

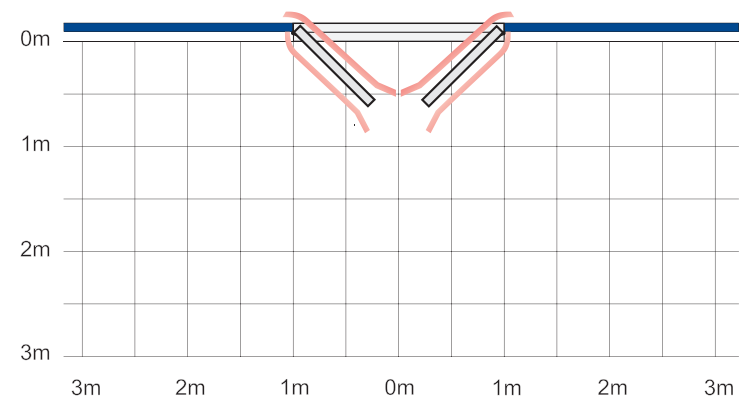

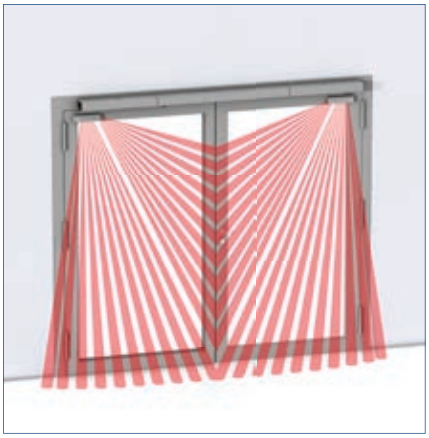

Protection range: 1.8 m up to 2,5 m installation height and 1.6 m up to 3.0 m installation height IDepending on the building and door situation, a finger protection shutter may be necessary if people in need of protection are to use the automatic door safely, and in conformity with standards!

ORDER INFORMATION

Designation	Version	ID no.
GC 344 kit Solid-state scanner with 20 precisely aligned single beams for the protection of the swivelling range of automatic swing doors	black stainless steel colour	216549 216550
GC 344 (left module) Solid-state scanner with 20 precisely aligned single beams for the protection of the swivelling range of automatic swing doors	black stainless steel colour	216546 216548
GC 344 (right module) Solid-state scanner with 20 precisely aligned single beams for the protection of the swivelling range of automatic swing doors	black stainless steel colour	216480 216547
ZUBEHÖR		
GC 342+ retrofit interface For simple and time-saving retrofitting of the sensor on pre-wired door systems. Also compatible with the GC 344 sensor.		199498

GC 338

Sensor strip for the protection of automatic swing and revolving doors in accordance with DIN 18650 / EN 16005

AREAS OF APPLICATION

- Protecting automatic swing and revolving doors in accordance with DIN 18650 / EN 16005
- Interior and exterior doors
- Complicated flooring, such as reflective floors, entrance mats, metal rails
- Narrow door profiles

PRODUCT FEATURES

- Energy and space-saving sensor strip for protection
- Standby mode provides up to 50 % energy savings and increases the life span of the light emitting diodes
- Close-knit detection area secures leaf widths of up to max. 1500 mm
- Integrated object and wall blanking near maximum door opening
- Automatised teaching of the system with the push of a button
- All settings can be conveniently made by DIP switch
- Click installation in the sensor cut-out profile reduces installation work

TECHNICAL DATA

	GC 338
Technology	Active infrared beams
Operating voltage	24 V DC ± 20%
Operating current	max. 200 mA (1200 series strip), max. 320 mA (1500 series strip) at 30 V DC
Output	PNP transistor output, max. 30 V DC, max. 100 mA
Installation height (min.)	1500 mm
Installation height (max.)	3500 mm
Length connector cable	5000 mm
Response time	< 52 ms and < 200 ms in boost mode
IP rating	IP52
Service temperature	–30 – 60 °C
Humidity	< 90 % relative, non-condensing
Approvals	DIN 18650, EN 16005

PRODUCT SCALE DRAWING

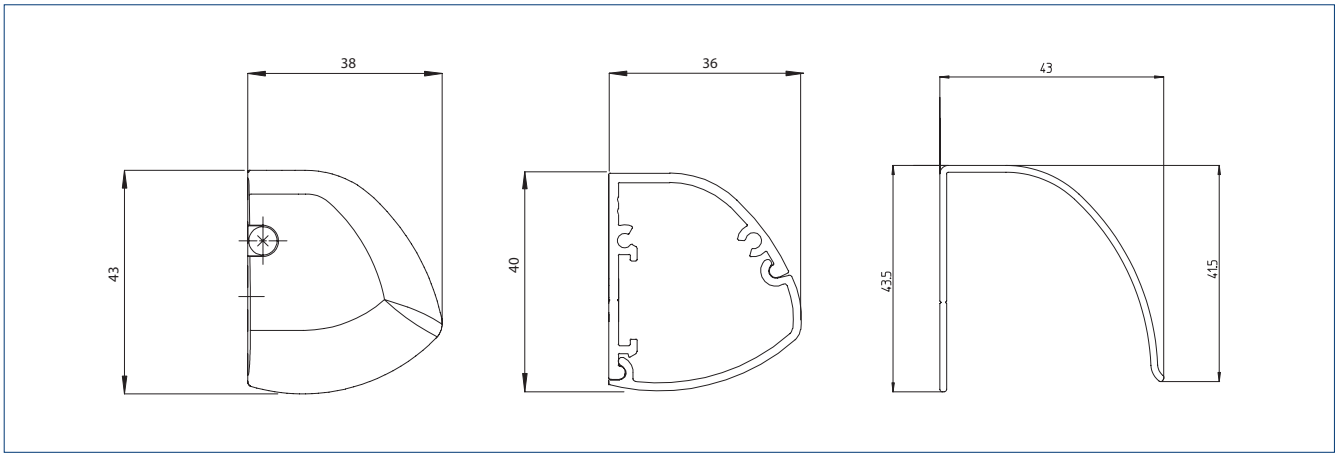

Leonberg town hall, Leonberg, Germany (photo: Jürgen Pollak / GEZE GmbH)

ORDER INFORMATION

Designation	Version	ID no.
GC 338 pair of sensor strips L= 1200 mm comprising two complete sensor strips for protection of the swivelling range of automatic swing and revolving doors in accordance with DIN 18650 / EN 16005	EV1 according to RAL	142219 142825
GC 338 pair of sensor strips L= 1500 mm comprising two complete sensor strips for protection of the swivelling range of automatic swing and revolving doors in accordance with DIN 18650 / EN 16005	EV1 according to RAL	142757 142827
ACCESSORIES		
Adapter for sensor link arm For Powerturn and EMD / EMD-F	EV1 according to RAL	144352 153126
GC GR for GC 338 L = 1200 mm For Powerturn / Powerturn F, installation on the hinge side, lever length 330 mm	EV1 according to RAL	157450 157451
GC GR for GC 338 L = 1500 mm For Powerturn / Powerturn F, installation on the hinge side, lever length 330 mm	EV1 according to RAL	157472 157473
GC GR for GC 338 L = 1200 mm For Powerturn / Powerturn F, opposite hinge side installation, lever length 450 mm	EV1 according to RAL	157474 157475
GC GR for GC 338 L = 1500 mm For Powerturn / Powerturn F, opposite hinge side installation, lever length 450 mm	EV1 according to RAL	157476 157477
GC GR for GC 338 L = 1200 mm For EMD-F-IS DIN left, transom installation opposite hinge side, with deeper guide, incl. lever and end caps	EV1 according to RAL	149952 149956
GC GR for GC 338 L = 1200 mm For EMD-F-IS DIN right, transom installation opposite hinge side, with deeper guide, incl. lever and end caps	EV1 according to RAL	149958 149962
GC GR for GC 338 L = 1200 mm for EMD/EMD-F, with lower guide, incl. lever and end caps	EV1 according to RAL	146205 146209
GC GR for GC 338 L = 1500 mm For EMD-F-IS DIN left, transom installation opposite hinge side, with deeper guide, incl. lever and end caps	EV1 according to RAL	149953 149957
GC GR for GC 338 L = 1500 mm For EMD-F-IS DIN right, transom installation opposite hinge side, with deeper guide, incl. lever and end caps	EV1 according to RAL	149959 149963
GC GR for GC 338 L = 1500 mm for EMD/EMD-F, with lower guide, incl. lever and end caps	EV1 according to RAL	146206 146210

GC 335

Sensor strip for the protection of automatic swing and revolving doors in accordance with DIN 18650 / EN 16005

AREAS OF APPLICATION

- Protecting automatic swing and revolving doors in accordance with DIN 18650 / EN 16005
- Interior and exterior doors
- Doors along escape and rescue routes
- Normal flooring

PRODUCT FEATURES

- Sensor strip with high safety standard to protect main and secondary closing edges
- Detection area secures leaf widths of up to max. 1400 mm
- Inclination angle and scanning range can be adjusted mechanically

TECHNICAL DATA

	GC 335
Technology	Active infrared beams
Operating voltage	24 V DC
Operating current	75 mA (master module), 65 mA (slave module) at 24 V DC
Output	Potential-free relay output, 30 V AC/DC, 0.3 A AC/0.3 A DC
Connection type	Plug-in screw terminal
Height	42 mm
Depth	37 cm
Dimensions	Sensor strip: 310/900/1400 (can be cut to size) x 42 x 37 mm (W x H x D) Sensor module: 179 x 23 x 33 mm (W x H x D)
Installation height (min.)	1500 mm
Installation height (max.)	2500 mm
Length connector cable	1000 mm
Response time	< 70 ms
IP rating	IP52
Service temperature	-10 – 50 °C
Humidity	< 90 % relative, non-condensing
Approvals	DIN 18650, EN 16005

PRODUKTMASSZEICHNUNG

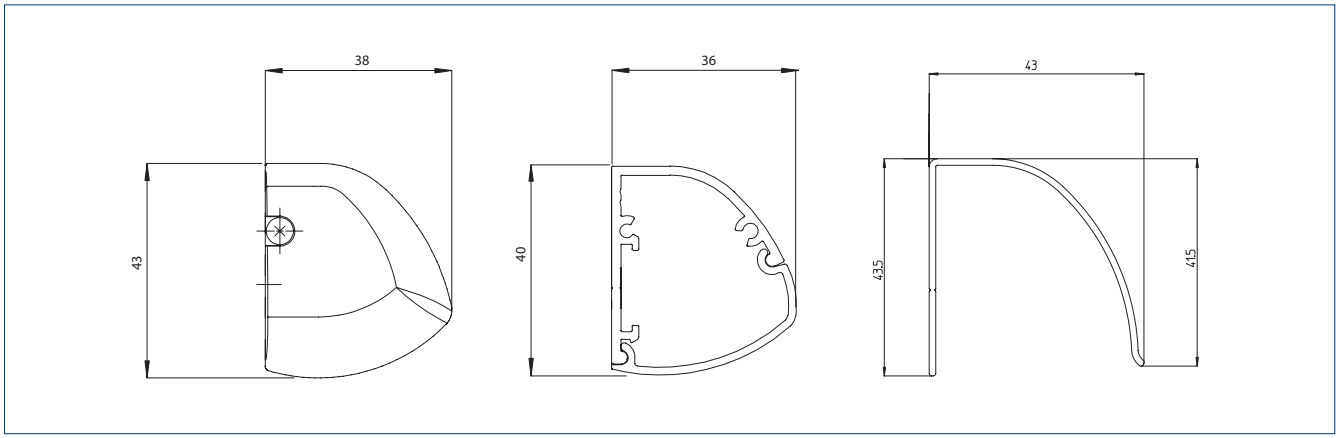

DETECTION AREA AND APPLICATION EXAMPLE

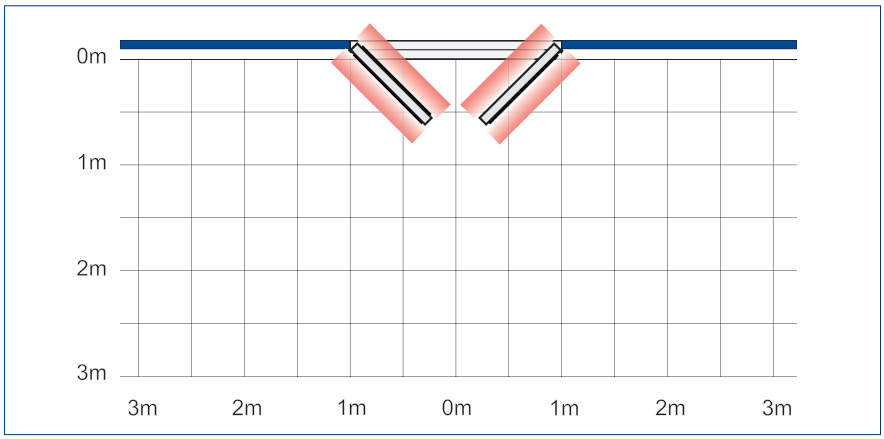

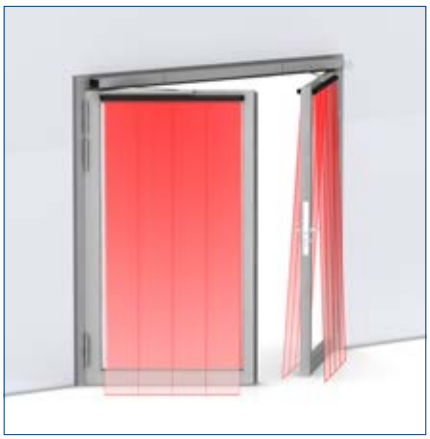

0.08 x 0.03 m per sensor module | Values given measured at installation height of 2.2 m

NUMBER OF MODULES (MASTER + SLAVE) PER SENSOR STRIP

Door leaf width	0.8 m	0.9 m	1.0 m	1.1 m	1.2 m	1.3 m	1.4 m
Installation height 2.2 m	1+2	1+3		1+4		1+5	

ORDER INFORMATION

Designation	Version	ID no.
GC 335 sensor strip L = 310 mm Protecting the swivelling range of automatic swing and revolving doors in accordance with DIN 18650 / EN 16005	EV1 according to RAL	129856 129859
GC 335 sensor strip L = 900 mm Protecting the swivelling range of automatic swing and revolving doors in accordance with DIN 18650 / EN 16005	EV1 according to RAL	128054 128057
GC 335 sensor strip L = 1400 mm Protecting the swivelling range of automatic swing and revolving doors in accordance with DIN 18650 / EN 16005	EV1 according to RAL	128058 128071
ACCESSORIES		
Adapter for sensor link arm For Powerturn and EMD / EMD-F	EV1 according to RAL	144352 153126
GC 335 expansion kit With one slave module, connecting cable and clip bearing		128072
Spot finder Device for determining the position of active infrared detectors		112321
Door transmission cable for GC 335 8-wire		057182
Door transmission cable for sensor Length 300 mm		025901

GC 341

VIDEO

Safety sensor for automatic doors

AREAS OF APPLICATION

- Protection of automatic sliding doors
- Automatic sliding doors without protective leaves to protect secondary closing edges
- Interior and exterior doors

PRODUCT FEATURES

- Reliable detection up to an installation height of 3500 mm
- Four adjustable light curtain configurations without additional light prisms
- Convenient commissioning via DIP switch

TECHNICAL DATA

	GC 341
Dimensions	267 x 61 x 38 mm
Technology	Active infrared beams
Operating current	100 mA
IP rating	IP54
Type of connection	System plug-type connector
Connector cable length	3000 mm
Installation height (min.)	2000 mm
Installation height (max.)	3500 mm
Service temperature	-20 °C - 55 °C
Humidity	< 80 % relative, non-condensing
Approvals	EN 16005, DIN 18650
Weight	245 g
IP rating	IP54

PRODUCT SCALE DRAWING

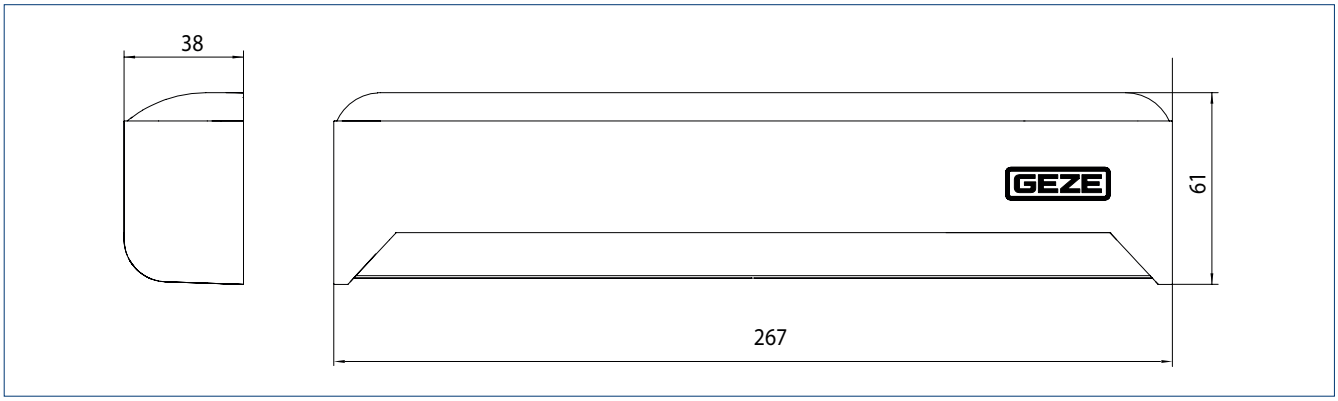

DETECTION AREA AND APPLICATION EXAMPLE

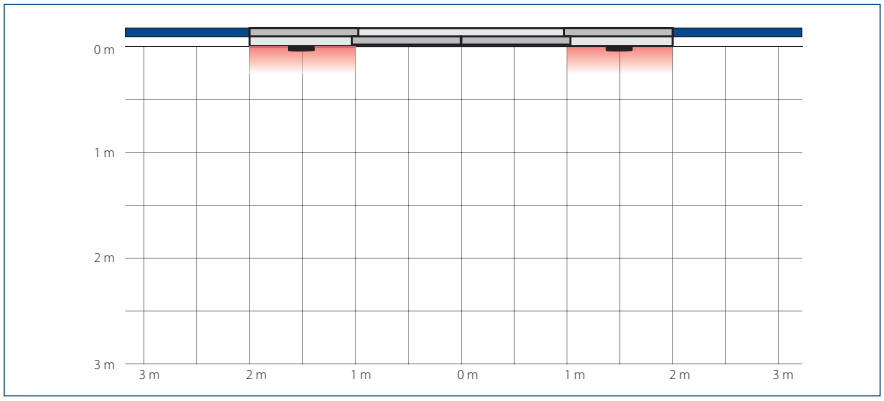

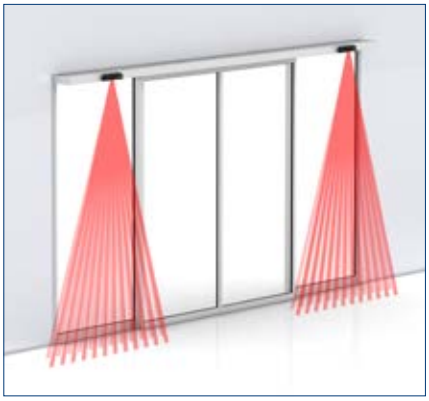

Active infrared detector Narrow field: 1.12 x 0.25 m, wide field: 2.65 × 0.25 m IValues given measured at an installation height of 2.2 m

4 ADJUSTABLE LIGHT CURTAIN CONFIGURATIONS WITHOUT ADDITIONAL LIGHT PRISMS

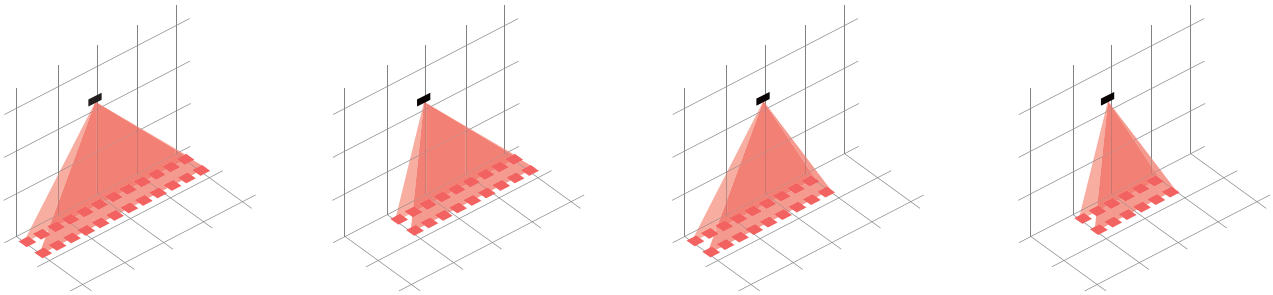

DIMENSIONAL DRAWINGS FOR ACCESSORIES

CEILING INSTALLATION KIT FOR GC 365 / GC 341

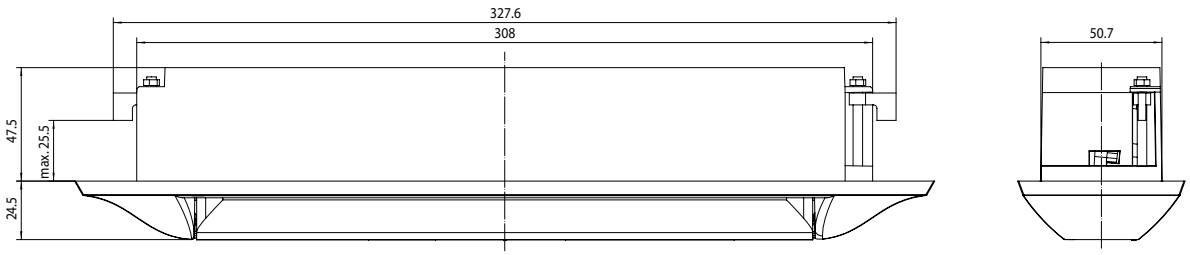

CEILING INSTALLATION BRACKET FOR GC 365 / GC 341

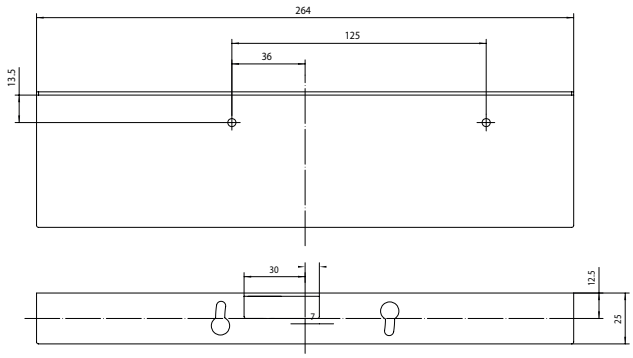

WEATHER HOOD FOR GC 365 / GC 341

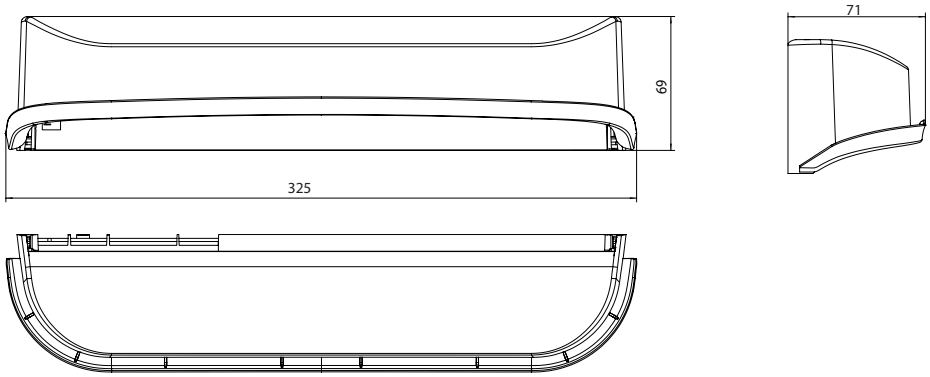

ORDER INFORMATION

Designation	Version	ID no.
GC 341 Self-monitored active infrared detector for protecting automatic doors	black	160285
ACCESSORIES		
Ceiling installation bracket GC 365 / GC 341	black	160286
Weather hood for GC 365 / GC 341 Protection against precipitation in outdoor use	black	160287
Ceiling installation kit GC 365 / GC 341 Installation kit for integrating the detector in the ceiling	black	160288
Spot finder Device for determining the position of active infrared detectors		112321
Retrofit adapter GC 365/341 (10->10 poles) From GC 362/GC 363 to GC 365 or from GC 333/GC 339 to GC 341		204529
Retrofit adapter GC 341 (6->10 poles) For GC 341 (1 PU = 20 pieces)		204531

GC 339+

Safety sensor for automatic sliding, revolving, and curved sliding doors, as well as for windows

AREAS OF APPLICATION

- Protection of automatic sliding, revolving and curved sliding doors, as well as of windows
- Automatic sliding doors without protective leaves to protect the secondary closing edge
- Interior and exterior doors
- Protection of the main and secondary closing edges on automated windows

PRODUCT FEATURES

- Reliable detection up to an installation height of 3500 mm
- Ten adjustable light curtain configurations without additional light prisms
- Convenient commissioning via matrix display
- Auxiliary LEDs aid in optimal positioning of the interior light curtain in front of the door leaves during commissioning
- Avoidance of hazards at pinching and shearing edges on automated windows
- All settings can be changed via remote control

TECHNICAL DATA

	GC 339+
Technology	Active infrared beams
Number of active infrared detectors	2
Operating voltage	12–24 V DC/AC
Operating current	125 mA
Output	Potential-free relay contact
Connection type	System plug-type connector
Height	58 mm
Width	209 mm
Depth	47 mm
Installation height (min.)	2000 mm
Installation height (max.)	3500 mm
Connector cablel ength	2600 mm
IP rating	IP54
Weight	300 g
Service temperature	-25 – 55 °C
Humidity	0–95 % relative, non-condensing
Approvals	EN 16005, DIN 18650

PRODUCT SCALE DRAWING

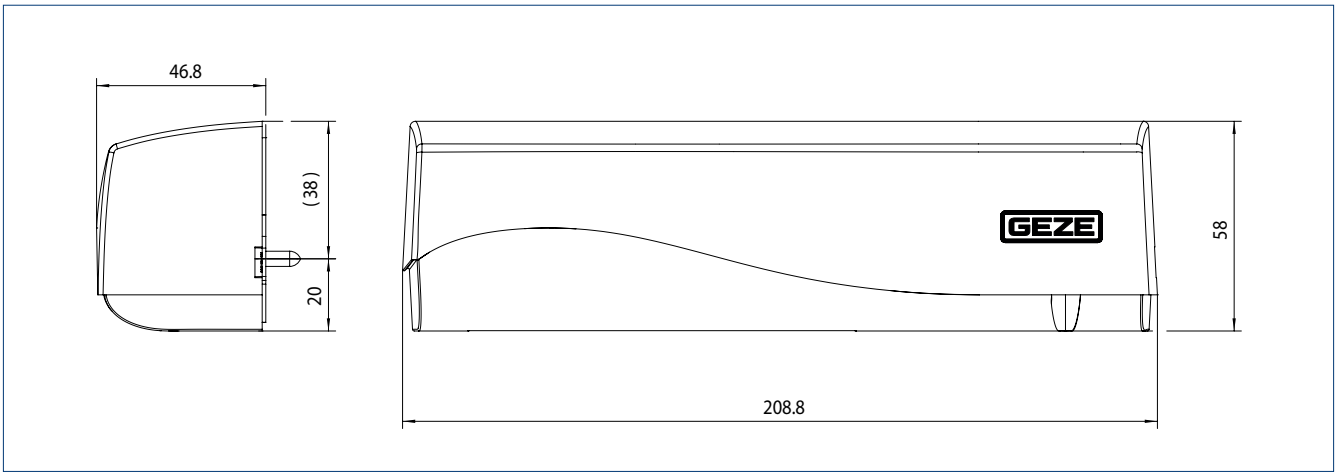

DETECTION AREA AND APPLICATION EXAMPLE

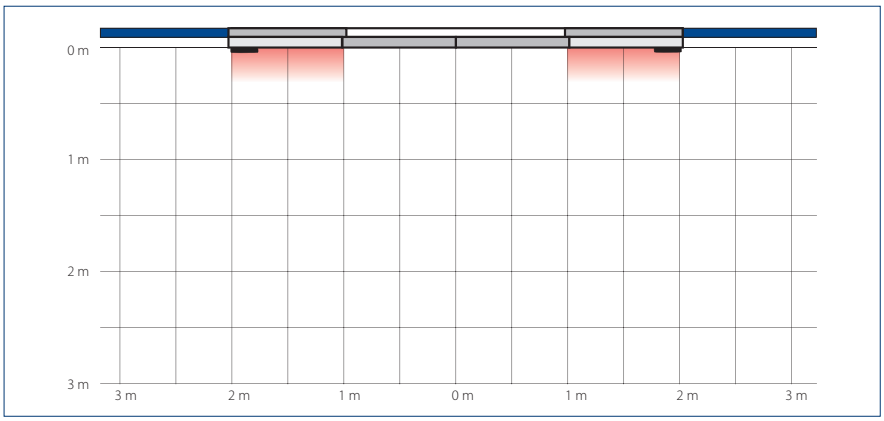

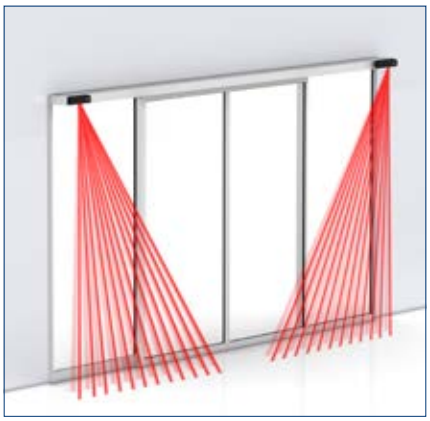

Active infrared detector Narrow field: 0.36 x 0.35 m, wide field: 2.2 x 0.35 m (W x D) I Values given measured at an installation height of 2.2 m

10 ADJUSTABLE LIGHT CURTAIN CONFIGURATIONS WITHOUT ADDITIONAL LIGHT PRISMS

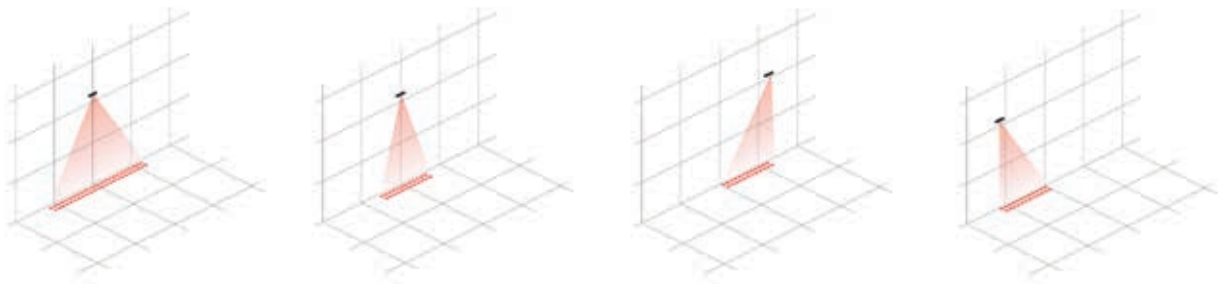

DIMENSIONAL DRAWINGS FOR ACCESSORIES

CEILING INSTALLATION KIT FOR GC 339+

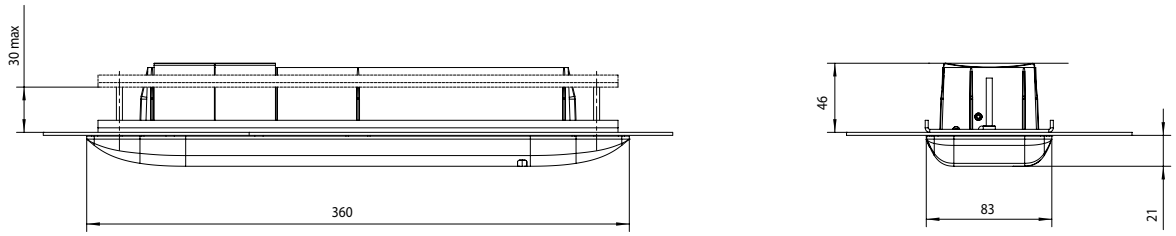

CEILING INSTALLATION BRACKET FOR GC 339+

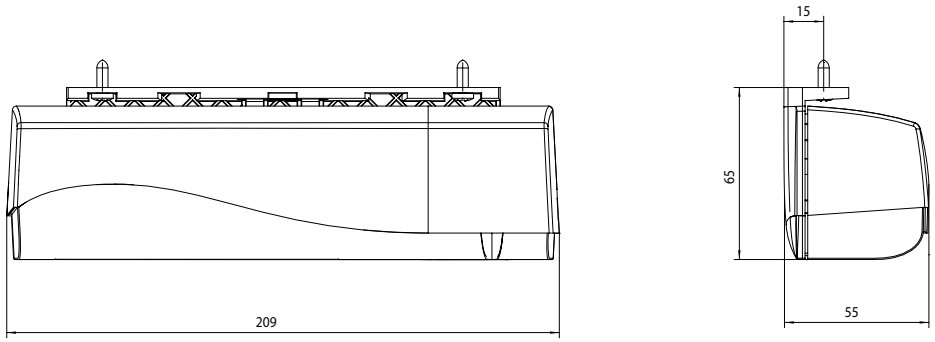

WEATHER HOOD FOR GC 339+

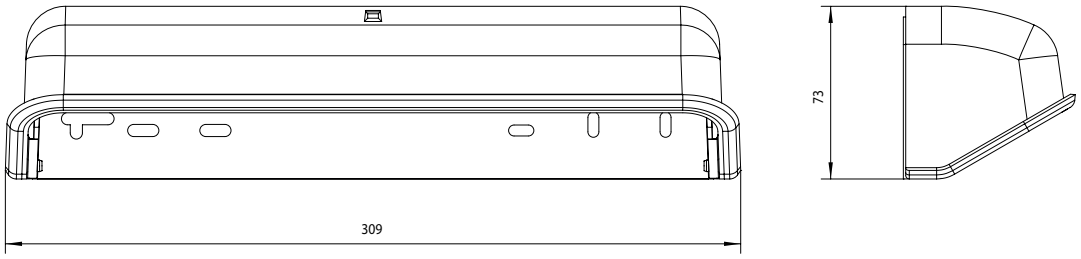

CURVED ADAPTER FOR GC 339+

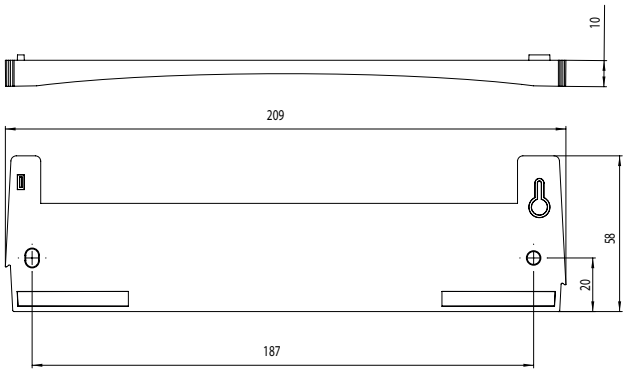

ORDER INFORMATION

Designation	Version	ID no.
GC 339+ Self-monitored light curtain for protecting automatic doors, suitable for GEZE GC 363+	black according to RAL	151251 151252
ACCESSORIES		
Ceiling installation bracket GC 339	black	153568
Ceiling installation kit GC 363 / GC 339 Installation kit for integrating the detector in the ceiling	white black	151254 151253
Ceiling installation kit GC 339, short Installation kit for integrating the detector in the ceiling	black	200682
Curved adapter for GC 339		151540
Weather hood for GC 363, GC 339 Protection against precipitation in outdoor use	black	158250
Remote control for sensors Adjustment and parameter setting of GC 363+, GC 339+, GC 342, GC 342+, GC 307+ and GC 304. Compatible with GC 362, GC 333, GC 333 C, GC 363, GC 339 and ACTIV S GE	black	100061
Spot finder Device for determining the position of active infrared detectors		112321

DOOR, WINDOW AND SAFETY TECHNOLOGY

Combined detectors

It is certain that automatic sliding doors must open early, as soon as people want to access the door. At the same time, the sliding door must not touch people while it is opening and closing. Our GEZE combined detectors will help to ensure that this happens: radar movement detectors with active infrared detectors. They can be individually attached with little installa-tion work and operated by remote control. Learn about the right model for you – whether it is for single or double-leaf sliding doors or for escape and rescue routes as well.

GC 365

VIDEO

Combined detector for activation and protection of automatic sliding doors with four adjustable light curtain configurations

AREAS OF APPLICATION

- Activation and protection of automatic sliding doors
- Interior and exterior doors

PRODUCT FEATURES

- Radar movement detector with active infrared detector and third presence detection
- Reliable detection up to an installation height of 3500 mm
- Four adjustable light curtain configurations without additional light prisms
- Fewer sensors are needed in total due to the large detection area on the floor
- Look back function secures the area between the door leaves during the hold-open time
- Installation and parameter setting information provided directly in the sensor housing
- All settings can be conveniently made by DIP switch

TECHNICAL DATA

	GC 365
Dimensions	267 x 61 x 38 mm
Technology	Electromagnetic radar waves/active infrared beams
Operating current	100 mA
IP rating	IP54
Type of connection	System plug-type connector
Connector cable length	3000 mm
Installation height (min.)	2000 mm
Installation height (max.)	3500 mm
Weight	270 g
Service temperature	-20 °C - 55 °C
Humidity	0-80 % relative, non-condensing
Approvals	DIN 18650, EN 16005
IP rating	IP54

PRODUCT SCALE DRAWING

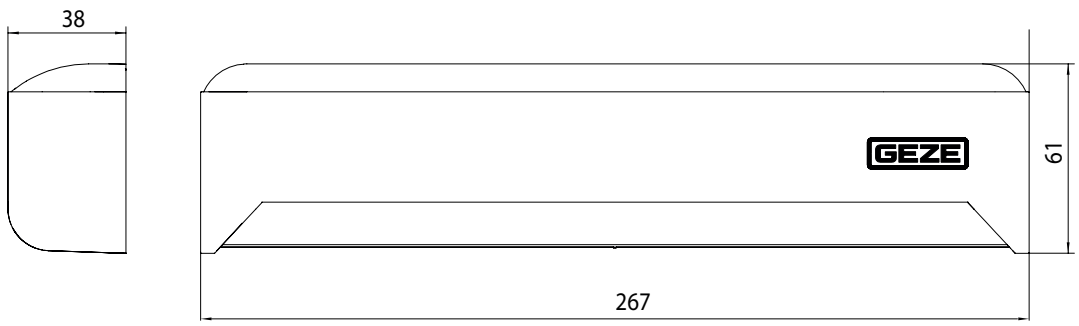

DETECTION AREA AND APPLICATION EXAMPLE

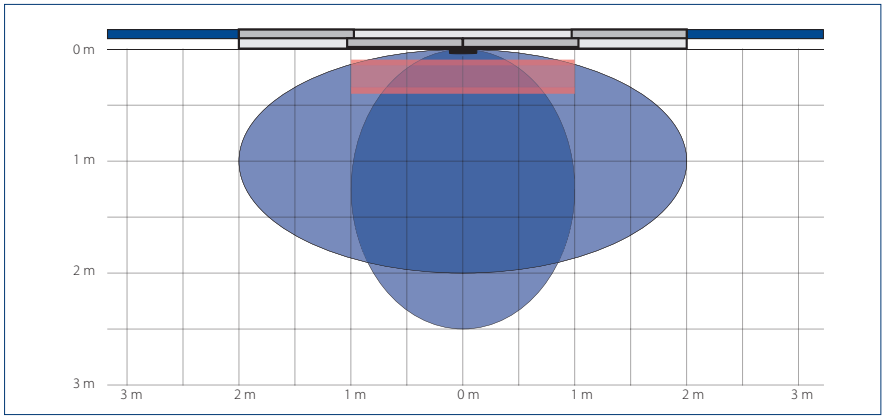

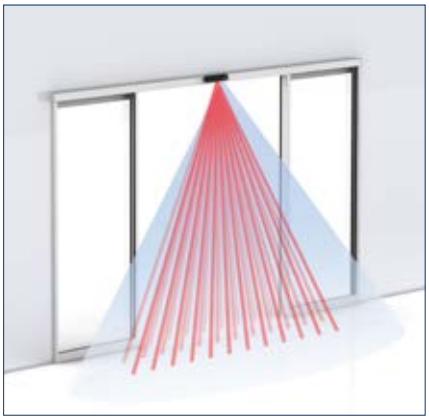

Radar field Narrow field (1): 2.0 x 2.5 m (W x D), wide field (2): 4.0 x 2.0 m (W x D) | **Active infrared detector** Narrow field: 1.12 x 0.25 m, wide field: 2.65 x 0.25 m | Values given measured at installation height of 2.2 m

4 ADJUSTABLE LIGHT CURTAIN CONFIGURATIONS WITHOUT ADDITIONAL LIGHT PRISMS

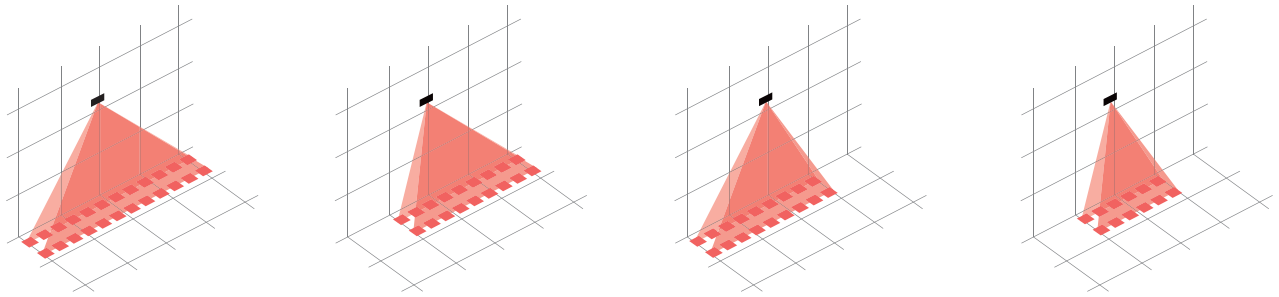

DIMENSIONAL DRAWINGS FOR ACCESSORIES

CEILING INSTALLATION KIT FOR GC 365 / GC 341

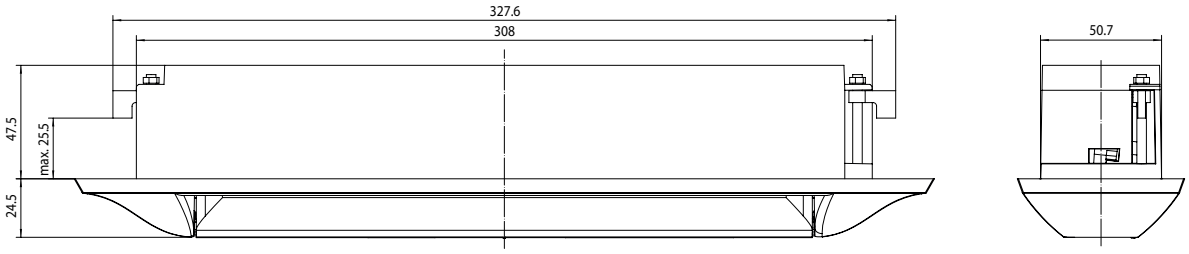

CEILING INSTALLATION BRACKET FOR GC 365 / GC 341

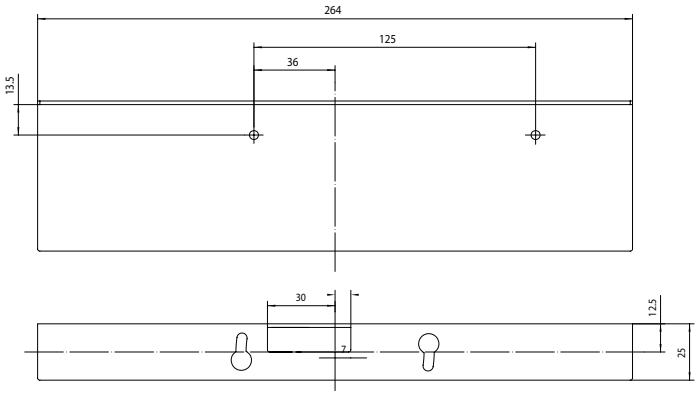

WEATHER HOOD FOR GC 365 / GC 341

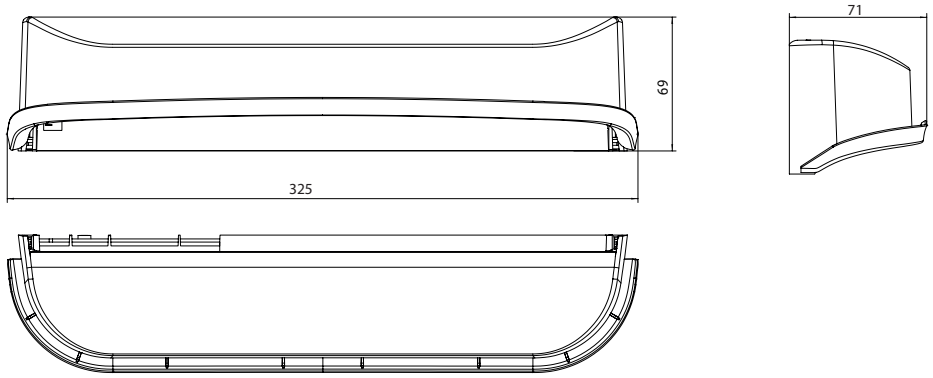

ORDER INFORMATION

Designation	Version	ID no.
Combined detector GC 365 R Combined detector for the activation and protection of automatic sliding doors	black	160283
Combined detector GC 365 SF Combined detector for the activation and protection of automatic sliding doors	black	160284
ACCESSORIES		
Ceiling installation bracket GC 365 / GC 341	black	160286
Weather hood for GC 365 / GC 341 Protection against precipitation in outdoor use	black	160287
Ceiling installation kit GC 365 / GC 341 Installation kit for integrating the detector in the ceiling	black	160288
Spot finder, device for determining the position of active infrared detectors		112321
Retrofit adapter GC 365/341 (10–>10 poles) From GC 362/GC 363 to GC 365 or from GC 333/GC 339 to GC 341		204529
Retrofit adapter GC 365 (8–>10 poles) For GC 365 (1 PU = 20 pieces)		204530

Bannockburn Visitor Centre, Stirling, United Kingdom (photo: Ian Arthur / GEZE GmbH)

GC 363+

Combined detector for activating and protecting automatic sliding doors with ten different infrared light curtain configuration settings

AREAS OF APPLICATION

- Activation and protection of automatic sliding doors
- Interior and exterior doors
- Complicated flooring, such as reflective floors, entrance mats, metal rails
- Wall, ceiling, or integrated ceiling installation

PRODUCT FEATURES

- Radar movement detector with active infrared detector
- Reliable detection up to an installation height of 3500 mm
- Ten adjustable light curtain configurations without additional light prisms
- Reduced installation work needed due to the combination of activation and protection in a single device
- Movement direction detection and cross-traffic fade-out reduces energy consumption in the building
- All settings can be changed via remote control
- Auxiliary LEDs aid in optimal positioning of the interior light curtain in front of the door leaves during commissioning

TECHNICAL DATA

	GC 363+
Technology	Electromagnetic radar waves/active infrared beams
Number of active infrared detectors	2
Operating voltage	12 – 24 V DC/AC
Operating current	125 mA
Output	Potential-free relay contact
Type of connection	System plug-type connector
Height	58 mm
Width	270 mm
Depth	58 mm
Installation height (min.)	2000 mm
Installation height (max.)	3500 mm
Weight	400 g
Length of connector cable	2600 mm
IP rating	IP54
Service temperature	-25 – 55 °C
Humidity	0 – 95 % relative, non-condensing
Approvals	EN 16005, DIN 18650

PRODUCT SCALE DRAWING

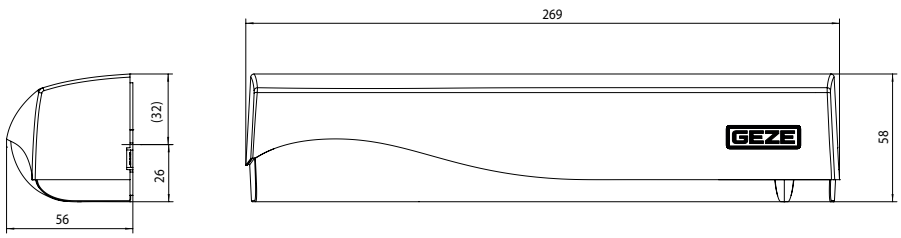

DETECTION AREA AND APPLICATION EXAMPLE

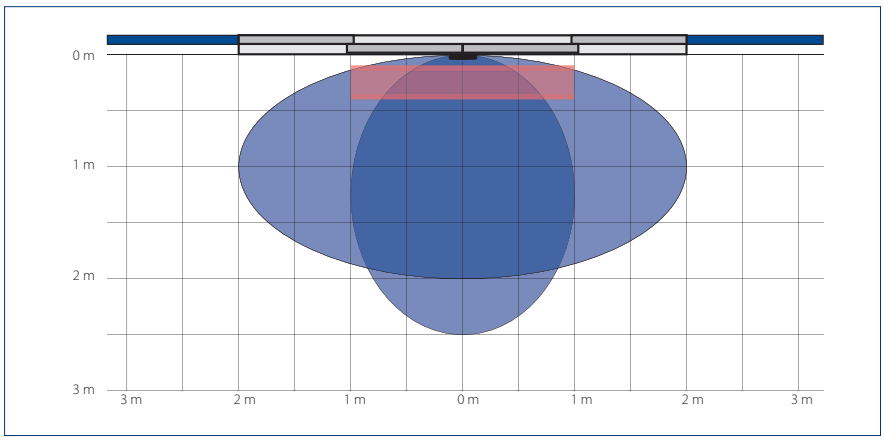

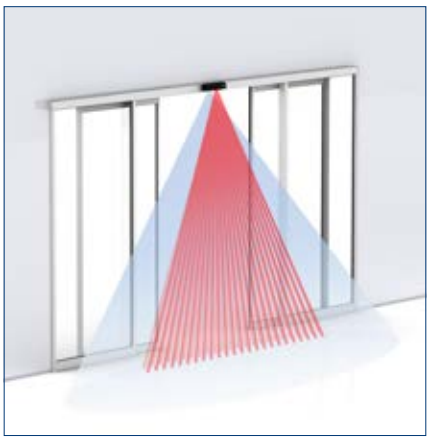

Radar field Narrow field (1): 2.0 x 2.5 m (W x D), wide field (2): 4.0 x 2.0 m (W x D) I **Active infrared detector** Narrow field: 0.36 x 0.35 m, wide field: 2.2 x 0.35 m (W x D) I Values given measured at an installation height of 2.2 m

10 ADJUSTABLE LIGHT CURTAIN CONFIGURATIONS WITHOUT ADDITIONAL LIGHT PRISMS

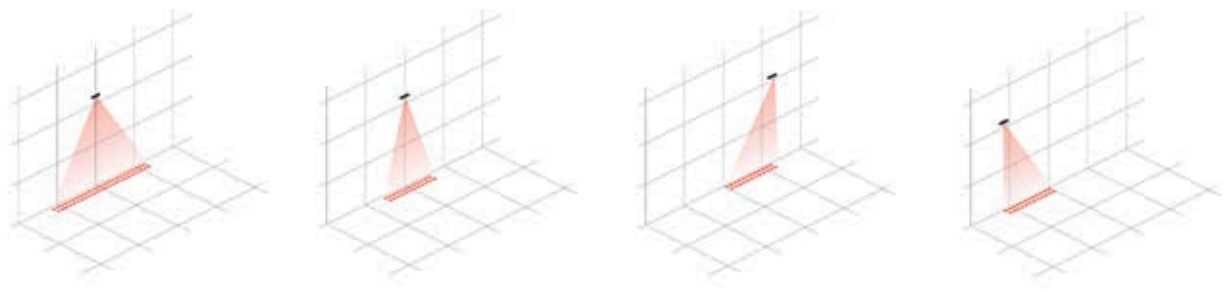

DIMENSIONAL DRAWINGS FOR ACCESSORIES

CEILING INSTALLATION KIT FOR GC 363+

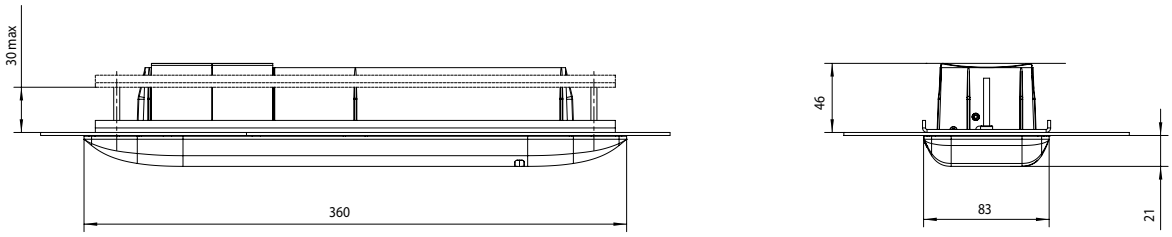

CEILING INSTALLATION BRACKET FOR GC 363+

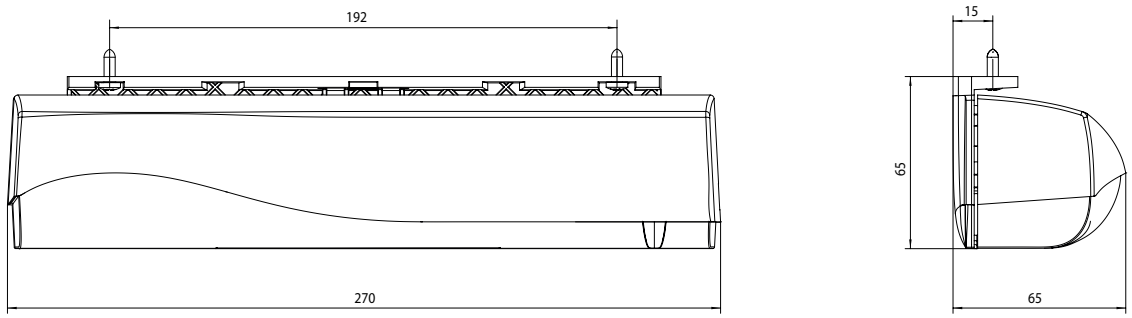

WEATHER HOOD FOR GC 363+

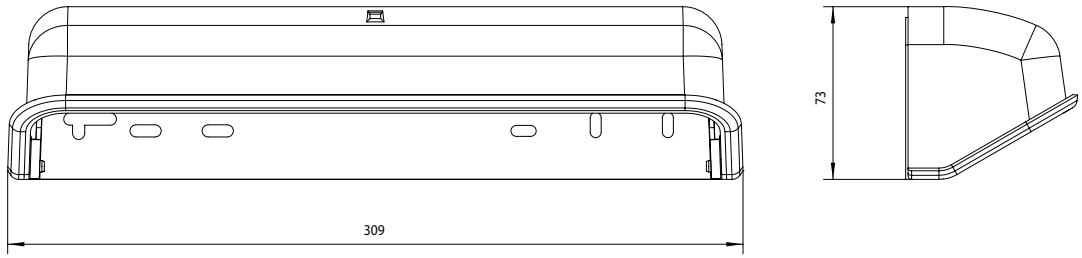

CURVED ADAPTER FOR GC 363+

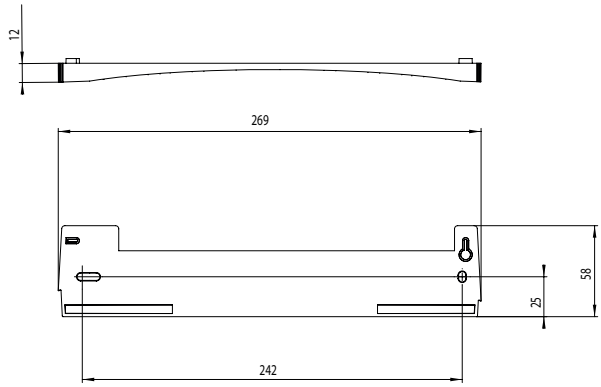

ORDER INFORMATION

Designation	Version	ID no.
GC 363+ R combined detector Combined detector for the activation and protection of automatic sliding doors	black according to RAL	151237 151238
GC 363+ SF combined detector Combined detector for the activation and protection of automatic sliding doors	black according to RAL	151239 151240
ACCESSORIES		
Ceiling installation bracket GC 363	black	151256
Ceiling installation kit GC 363 / GC 339 Installation kit for integrating the detector into the ceiling	white black	151254 151253
Curved adapter for GC 363		151255
Weather hood for GC 363, GC 339 Protection from rainfall in exterior area	black	158250
Remote control for sensors Adjustment and parameter setting of GC 363+, GC 339+, GC 342, GC 342+, GC 307+ and GC 304. Compatible with GC 362, GC 333, GC 333 C, GC 363, GC 339 and ACTIV S GE	black	100061
Spot finder Device for determining the position of active infrared detectors		112321
Interface GC 363 S Interface for the series connection of a maximum of two GC 363+ SF or GC 363 SF combined detectors for the variants FR-RWS, FR-LL and FR-DUO		151361

Installation situation (photo: GEZE GmbH)

DOOR, WINDOW AND SAFETY TECHNOLOGY

Programme switches and key switches

If you only want authorised people to be able to operate or control your doors, then lock your doors or clear them with the help of our programme switches. This is especially important for escape and rescue routes, as programme switches are prescribed here for every door system. Choose between mechanical lockable programme switches or display and keypad programme switches which can be combined with a key switch or protected with a code. You will be on the safe side in any event.

Programme switches

Display programme switch (DPS) with OFF switch

Display programme switch with key switch (DPS-SCT) and OFF switch

Keypad programme switch (TPS)

Keypad programme switch with key switch (TPS-SCT)

Mechanical programme switch (MPS)

Mechanical programme switch with key (MPS-ST)

Mechanical programme switch with rotary knob (MPS-D)

Mechanical programme switch with key (MPS-D-ST)

Programme switches for selection of the operating status of automatic doors

AREAS OF APPLICATION

→ For surface- and flush-mounted installation

→ Compatible with: Jung AS 500, A plus, Gira: Standard 55, E2, Esprit, Event, stainless steel (with Gira 028920 intermediate frame), Merten: M-Smart, M-Plan, Berker: B.1, B.7

TECHNICAL DATA

	DPS	DPS-SCT	TPS	TPS-SCT	MPS	MPS-ST	MPS-D	MPS-D-ST
ECdrive T2 Slimdrive SL Powerdrive	●	●	●	●	●	●		
ECdrive T2-FR Slimdrive SL-FR Powerdrive FR	●	●	●	●		●		
ECturn			●	●				
Slimdrive EMD / -F	●	●	●	●	●	●	●	●
Powerturn	●	●			●	●	●	●
TSA 325 NT			●**	●**				
Operation	Push buttons	Push buttons + key	Push buttons	Push buttons + key	Rotary knob	Key	Rotary knob	Key
Functionality	Parameter setting, commission-ing and selection of operating status	Parameter setting, commis-sioning and selection of operating status with authori-sation	Selection of operating status	Selection of operating status with authori-sation	Selection of operating status	Selection of operating status with simul-taneously locking key	Selection of operating status	Selection of operating status with simul-taneously locking key
Fault display	using numerical code	using numerical code	via LED blink code	via LED blink code	via LED warning light	via LED warning light		
Version	flush-/ surface-mounted*	flush-/ surface-mounted*	flush-/ surface-mounted*	flush-/ surface-mounted*	flush-/ surface-mounted*	flush-/ surface-mounted*	flush-/ surface-mounted*	flush-/ surface-mounted*
IP rating	IP40	IP40	IP40	IP40	IP40	IP40	IP40	IP40
Dimensions (WxHxD)	80 x 80 x 11 mm (flush-mounted) 80 x 80 x 47 mm (surface-mounted*)	80 x 152 x 11 mm (flush-mounted) 85 x 156 x 47 mm (surface-mounted*)	80 x 80 x 11 mm (flush-mounted) 80 x 80 x 47 mm (surface-mounted*)	80 x 152 x 11 mm (flush-mounted) 85 x 156 x 47 mm (surface-mounted*)	80 x 80 x 22 mm (flush-mounted) 80 x 80 x 58 mm (surface-mounted*)	80 x 80 x 18 mm (flush-mounted) 80 x 80 x 54 mm (surface-mounted*)	80 x 80 x 22 mm (flush-mounted) 80 x 80 x 58 mm (surface-mounted*)	80 x 80 x 18 mm (flush-mounted) 80 x 80 x 54 mm (surface-mounted*)
ACCESSORIES	**Euro profiloe half cylinder ID no. 090176**			**Euro profiloe half cylinderr ID no. 090176**	**Replacement key ID no. 137054**		**Replacement key ID no. 137055**	
ID no.	151524	155810	113231	113232	113226	113227	118417	118418

* For surface-mounted installation order surface-mounted box 120503 (1-piece) or 128609 for SCT versions (2-piece) separately.
** Special version for revolving doors with 'Manual' mode of operation: TPS-KDT (ID no.: 126582)

Key switches

Burglary-resistant key switch (flush-mounted)

Burglary-resistant key switch (surface-mounted)

Key switch plastic AS 500

Key switch stainless steel (1)

Key switch stainless steel (2)

Key switch stainless steel (3)

Key switches for authorised opening of automatic doors

AREAS OF APPLICATION

- Activation of automatic swing, sliding, folding, revolving and curved sliding doors
- Can be used for inside and outside areas as contact authorisation

TECHNICAL DATA

	Burglary-resistant key switch	AS 500 plastic key switch
Specifications	- 1-pole normally open contact - Switching voltage: max. 230 V AC - Switching current: max. 5 A - Spring return, one side	- 1-pole normally open contact - Switching voltage: max. 240 V AC - Switching current: max. 4 A - Spring return, one side
Version	Flush-mounted (not for standard flush-mounted box) /surface-mounted	flush-/surface-mounted*
IP rating	IP54	IP20
Dimensions	75 x 75 x 11 mm (flush-mounted) 75 x 75 x 50 mm (surface-mounted)	80 x 80 x 11 mm
ACCESSORIES	**Euro profile cylinder, ID no. 090176**	**– *Surface-mounted box, ID no. 120503** **– Switch contact, ID no. 024467** **– Euro profile cylinder, ID no. 090176**
ID no.	054240 (flush-mounted) 054532 (surface-mounted)	117996

	Stainless steel key switch (1)	Stainless steel key switch (2)	Stainless steel key switch (3)
Specifications	- 1-pole normally open contact - Switching voltage: max. 230 V AC - Switching current: max. 5 A - Spring return, one side	• 2-pole normally open contact - Switching voltage: max. 230 V AC - Switching current: max. 5 A - Latching, two sides (key removable in Position I)	• 2-pole normally open contact - Switching voltage: max. 230 V AC - Switching current: max. 5 A - Latching or spring return, two sides (key removable in Position I)
Version	Flush-mounted	Flush-mounted	Surface-mounted
IP rating	IP54	IP54	IP54
Dimensions	79 x 79 x 13 mm	79 x 79 x 13 mm	75 x 74 x 66 mm
ACCESSORIES	**Euro profile cylinder, ID no. 090176**	**Euro profile cylinder, ID no. 090176**	
ID no.	098870	111357	137056

Safety switches and emergency push buttons

Manual trigger switch

Emergency stop switch with glass pane

Manual trigger switch with glass pane

Emergency push button 220 flush-mounted

Emergency push button 220 surface-mounted

Safety switches and emergency push buttons for deactivating the mains voltage and enabling emergency opening of automatic doors

AREAS OF APPLICATION

- Protecting automatic swing, sliding, folding, revolving and curved sliding doors
- Use in emergencies for switching off the mains voltage
- Use in emergencies for opening automatic doors
- Use during maintenance work for switching off the mains voltage
- Use for hold-open systems for manual release of hold-open device

TECHNICAL DATA

	Manual trigger switch	Emergency stop switch with glass pane	Manual trigger switch with glass pane
Specifications	- 1-pole changeover contact - Switching voltage: max. 250 V AC - Switching current: approx. 10 A - incl. resistance	- 1-pole changeover contact - Switching voltage: max. 250 V AC - Switching current: max. 10 A - with glow lamp	- 1-pole changeover contact - Switching voltage: max. 250 V AC - Switching current: approx. 10 A - incl. resistance
Version	flush-/surface-mounted*	flush-/surface-mounted*	flush-/surface-mounted*
IP rating	IP40	IP20	IP20
Dimensions	80 x 80 x 9 mm	80 x 80 x 21 mm	80 x 80 x 21 mm
ACCESSORIES	**– Surface-mounted box, ID no.: 120503**	**– Surface-mounted box, ID no.: 120503 – Replacement glass panel, ID no.: 010994**	**– Surface-mounted box, ID no.: 120503 – Replacement glass panel, ID no.: 010994**
ID no.	116266	120881	120880

	Emergency push button 220 UP	Emergency push button 220 AP
Specifications	- Contact system 1 normally closed contact / 1 normally open contact - Switching voltage: max. 230 V AC - Switching current: max. 10 A - Lighting: 24 V DC at 15 mA	- Contact system 1 normally closed contact / 1 door normally open contact - Switching voltage: max. 230 V AC - Switching current: max. 10 A - Lighting: 24 V DC at 15 mA
Version	Flush-mounted	Surface-mounted
IP rating	IP40	IP65
Dimensions	80 x 80 x 49 mm	94 x 94 x 122 mm
ACCESSORIES	**2x normally closed contact ID no.: 210207**	**2x normally closed contact ID no.: 210207**
ID no.	210204	210203

Panorama Restaurant at the peak of the Zugspitze, Garmisch Partenkirchen, Germany (photo: Robert Sprang / GEZE GmbH)

DOOR, WINDOW AND SAFETY TECHNOLOGY

Smoke switches and control units

You need to ensure maximum safety in the event of a fire – smoke switch control units on automatic doors are vital here. If smoke or a fire develops, the smoke switch control unit will react early and reliably: the automatic door will close immediately. This is done by cutting the power which the smoke switch control unit normally supplies to the hold-open devices in the door. Practical: You can check the status of the integrated smoke switch at any time via the visual display.

RSZ 7 smoke switch control unit

VIDEO

Extendable smoke switch control unit for all GEZE hold-open devices

AREAS OF APPLICATION

- Approved for all GEZE hold-open devices for the early detection of fire and smoke
- Difficult lintel situations, for example with too little space above the smoke chamber
- Installation above the active leaf on the vertical wall
- Installation possible with surface-mounted line-feed

PRODUCT FEATURES

- Telescopic function for bridging overhangs of up to 30 mm
- Connection to 230 V power supply and 24 V DC supply of the hold-open device
- Voltage supply of the hold-open system is interrupted in the case of an alarm and the doors close
- Integrated smoke switch with automatic adaptation of the alarm threshold
- Compensates for light contamination of the smoke chamber and thus increases the service life
- Visual display of the current control unit status
- Additional smoke switches can be connected

PRODUCT SCALE DRAWING

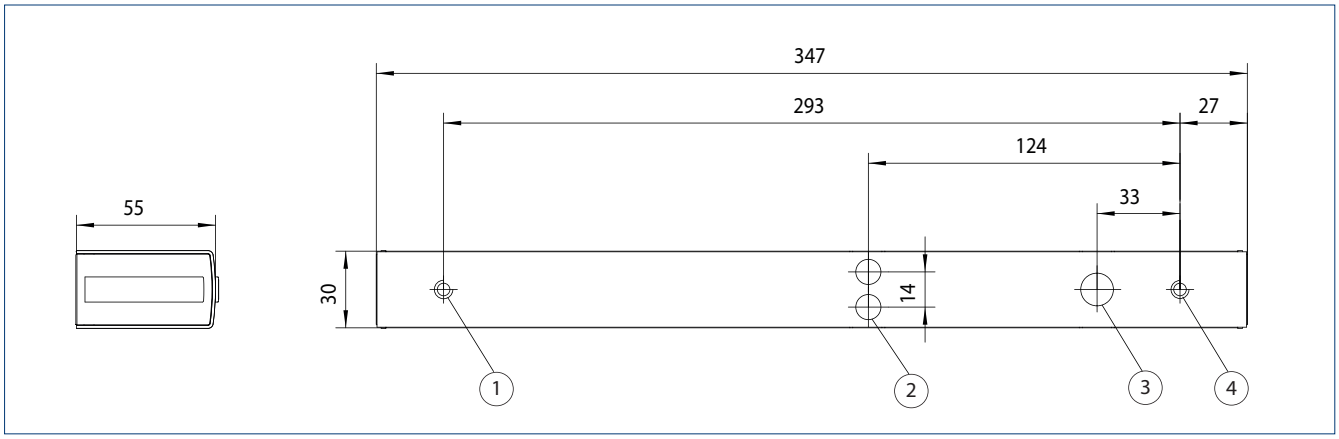

1 = M5 threaded hole | 2 = opening for additional connections | 3 = power supply (230 V) | 4 = M5 threaded hole

ORDER INFORMATION

Designation	Version	ID no.
RSZ 7 smoke switch control unit Smoke switch control unit for all GEZE hold-open devices	silver-coloured	181025
	white RAL 9016	184195
	simulated stainless steel[1]	184196
	according to RAL[2]	185231
ACCESSORIES		
FA GC 170 wireless KIT Set comprising: 1 piece GC 171 wireless module for the wireless extension of GEZE hold-open systems and 2 pieces GC 172 wireless ceiling-mounted smoke detectors		195524
GC 152 smoke detector Complete with base, 24 V DC, 20 mA, tested in accordance with EN54-7, general building approval for use with all GEZE hold-open systems, integrated line monitoring, conforms with DIN EN 14637	white	139850
GC 153 thermal detector Complete with base, 24 V DC, 20 mA, tested in accordance with EN54-5, general building approval for use with all GEZE hold-open systems, integrated line monitoring, conforms with DIN EN 14637	white	139881
Manual trigger switch Flush-mounted version for the manual release of electrically controlled hold-open devices	alpine white	116266
Surface-mounted box, single suitable for the AS 500 switch range		120503
Manual trigger switch with glass pane and 5 interchangeable labels Flush-mounted version for the manual release of electrically controlled hold-open devices	alpine white	120880
Replacement glass pane for 120880 and 120881 manual trigger switch		010994

[1] Only for dry rooms | [2] Surcharge for RAL special colours, see General Notes in the price list.

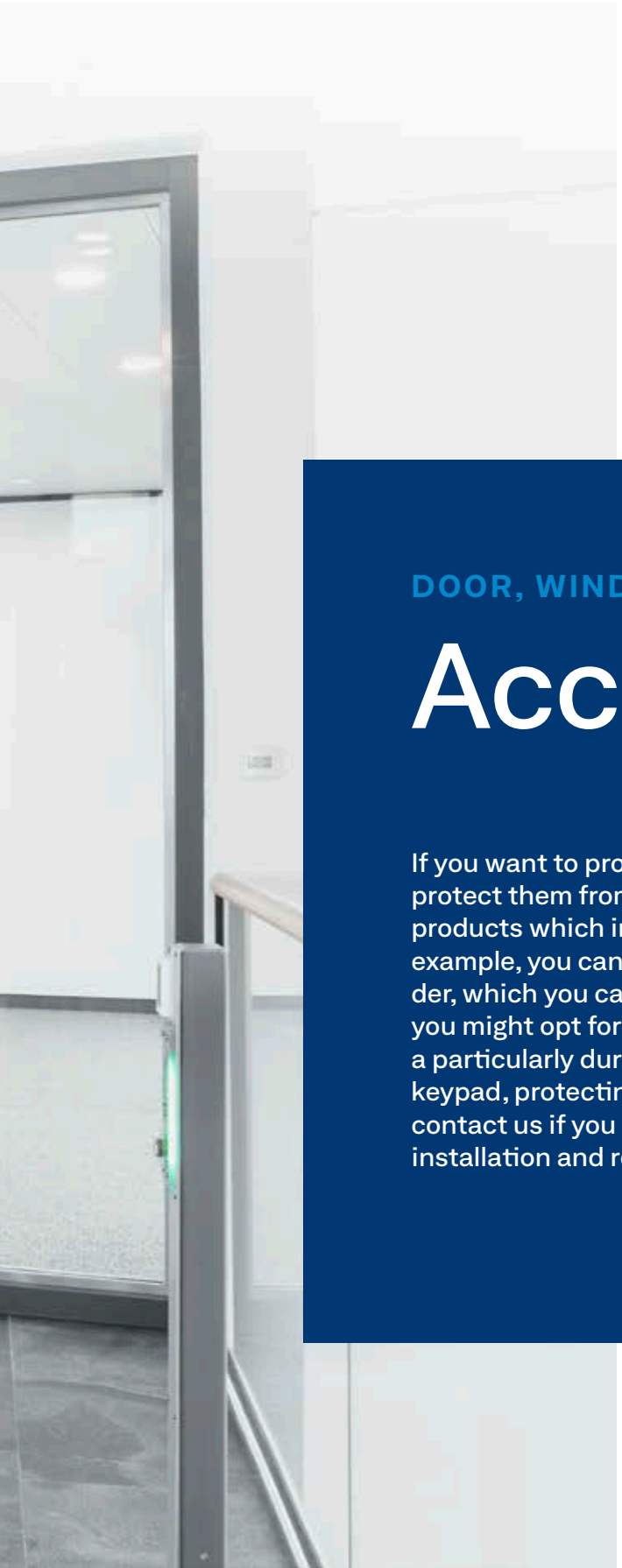

DOOR, WINDOW AND SAFETY TECHNOLOGY

Accessories

If you want to protect your automatic doors even more and protect them from potential damage, you can find further products which increase safety in our accessories range. For example, you can install a floor lock with a Euro profile cylin-der, which you can lock with a key as and when needed. Our you might opt for one of our number codelocks, which have a particularly durable structure with cast casing and a metal keypad, protecting it from damage. Please do not hesitate to contact us if you have any questions about our products or installation and retrofitting.

Accessories

Rotary switch contact

Euro profile cylinder for key switch

Euro profile cylinder for floor locks

Toplock CTI

Toplock CTI B with lighting

Toplock CTS V with metal keypad

Toplock CTS BV with lighting

Accessories for special demands for the operation and safety of automatic doors

AREAS OF APPLICATION

- Activation and protection of automatic swing, sliding, folding, revolving and curved sliding doors
- Use as contact sensor when door handle is pressed
- Use for floor locking of sliding doors
- Use as access control for interior and exterior applications

TECHNICAL DATA

	Rotary switch contact	Euro profile cylinder for key switch	Euro profile cylinder for floor locks
Specifications	– Normally open contact – Switching voltage: max. 24 V DC – Switching current: max. 35 mA – 4 m connector cable	– Euro profile cylinder for 40 mm key switch (10/30), one-sided locking, with 3 keys	– Euro profile cylinder for 46 mm floor locks (9/37) one-sided locking, for ISO and toughened safety glass door fittings, with 3 keys, ID no. 019053 – Euro profile cylinder for 66 mm floor locks 31/35) two-sided locking, for toughened safety glass door fittings, with 3 keys, ID no. 091052 – Euro profile cylinder for 71 mm floor locks (31/40) two-sided locking, for ISO door fittings, with 3 keys, ID no. 023356 – Euro profile cylinder for 71 mm floor locks (31/40) two-sided locking, packed in pairs, for ISO door fittings, with 3 keys, ID no. 074862
Dimensions	23 x 39 x 8 mm		
ID no.	081024		

	Toplock CT I	Toplock CT I B with lighting	Toplock CTS V with metal keypad	Toplock CTS BV with lighting
Operating voltage	12 – 24 V DC / 12 V AC	12 – 24 V DC / 12 V AC	230V AC	230V AC
Output	potential-free normally open contact 24 V DC 1 A	potential-free normally open contact 24 V DC 1 A	potential-free relay output 250 V 5 A	potential-free relay output 250 V 5 A
IP rating	IP65	IP65	IP65 (keypad), IP43 (evaluating unit)	IP65 (keypad), IP43 (evaluating unit)
Dimensions	80 x 80 x 15 mm	60 x 126 x 2.,5 mm	80 x 80 x 15 mm or 110 x 188 x 40 mm	60 x 126 x 22.5 mm or 110 x 188 x 40 mm
ID no.	090061	090063	090077	090079

DOOR, WINDOW AND SAFETY TECHNOLOGY

References

Discover the pioneering buildings which we were able to equip with GEZE activation devices and sensors. We offer the ideal solution for each door situation and this has gained us customers from all over the world: be it automatic drives for swing doors, sliding doors, revolving doors or curved sliding doors – when automatic door systems are involved, activation devices and sensors from GEZE are always the first choice. We offer tested and certified complete solutions for individual needs.

Vitra Haus, Weil am Rhein, Germany (photo: Oliver Look / GEZE GmbH)

experimenta Science Centre, Heilbronn, Germany (photo: Jürgen Pollak / GEZE GmbH)

Gelderlandplein, Amsterdam, Netherlands (photo: Erwin Kamphuis / GEZE GmbH)

Modern Art, Oxford, Great Britain (photo: GEZE GmbH)

We are GEZE.

For liveable buildings

GEZE stands for innovation, high quality and comprehensive support of building technologies. From the initial idea, planning and operational implementation with series products to customised system solutions and individual service and maintenance plans. We offer an extensive product range of door, window and safety technology products and are a major driving force behind the digital networking of building automation.

GEZE GmbH

Reinhold-Vöster-Strasse 21 – 29

71229 Leonberg

Germany

Telephone: +49 7152 203 0

Fax: +49 7152 203 310

Email: info.de@geze.com

www.geze.com

2026_08 ID no. 142655 EN Subject to change without notice