M 1:1

Mounting elements

Window type	Fixing screws		Drill⌀
Wood	Countersunk wood screws 5x35 DIN97 or DIN7997 gear Fz100 and Fz101 : 5x50		3mm
Aluminium	Countersunk self-tapping screws 4.8x22 DIN7972 or DIN7982. L=screw must pass through min. 2mm profile wall Gear Fz100 and Fz101 : 4.8x32		4mm
synthetic	Countersunk self-tapping screws 4.8xL DIN 7972 or DIN 7982 L=bolt must pass through min. 2 profile walls.	From 40 kg/m² panel weight, the scissors base, casement bracket and drive are to be screwed on the metal reinforcement	4mm

Fixing screws are not included in the delivery.

Casement width depending on the angle (W) at the window

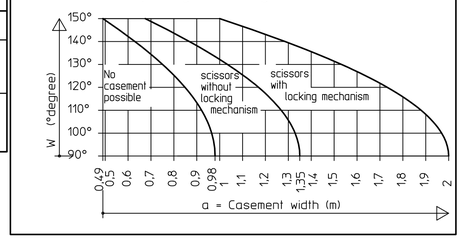

Important information:

- Installation drawing, installation instructions, maintenance and operating instructions must be observed,
- The specified area of application must be observed,
- The prescribed fitting dimensions must be observed,
- The prescribed mounting elements must be used,
- In order to avoid injuries, protective caps must be turned on projecting threads of the fixing screws,
- Fittings are drawn in the closed position, but assembly is carried out in the open position,
- All fixing screws must be tightened in the open position with an Allen key SW4 with 8Nm,
- After assembly and before commissioning, the function of tightening all fixing screws must be checked , and all fixing screws must be tightened again,
- The joints and sliding points must be greased with an acid-free grease in accordance with DIN 51825,
- The free accessibility of the fitting parts for greasing and maintenance must be ensured in accordance with DIN 18357,
- If rods and cover profiles from other manufacturers are used, GEZE assumes no warranty and no liability for the resulting damage and consequential damage,
- From a free rod length of 800mm, rod guides must be used,
- The use of a suitable safety catch is prescribed for bottom-hung windows (see GEZE gripping and cleaning scissors),

Drilling template application OL320

(Hole pattern only for scissors, casement bracket, end cap and bar guide)

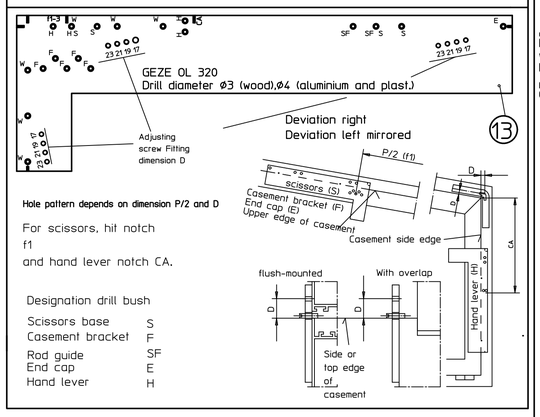

Hole pattern depends on dimension P/2 and D

For scissors, hit notch f1 and hand lever notch CA.

Designation drill bush

Scissors base	S
Casement bracket	F
Rod guide	SF
End cap	E
Hand lever	H

Area of application

Only for vertically installed bottom-hung casements inward opening

Derivation only possible via obtuse window angle

g = Casement width
P = Length of inclined leg 980-2000mm
W = Angle at window 90-150°.
b2 =Casement height min. 400mm
Casement weight max. 150kg

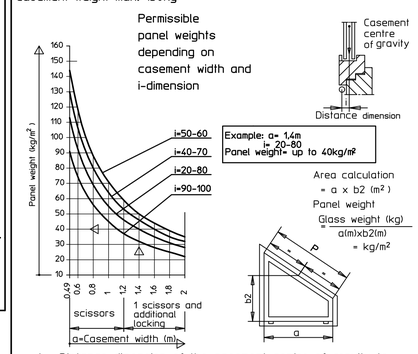

i = Distance dimension of the casement centre of gravity to the hinge pivot point = 20 to 100mm
Ü = Overlap height 0-25mm
D = Outer edge of casement to centre of link arm (see table)
CA =Top edge small casement height to bottom edge Hand lever base plate min.350mm
X = Side clearance X=D+13mm, Xmin.=30mm, D side min.17mm
Y = Upper clearance (see table)

Casement height b2	D-dimension top	Clearance Y top
400	min.23mm	min.36mm
500	21mm/23mm	D+13mm
600	19/21/23mm	D+13mm
800	17/19/21/23mm	D+13mm

When using an additional locking, a D dimension of 19mm is required.

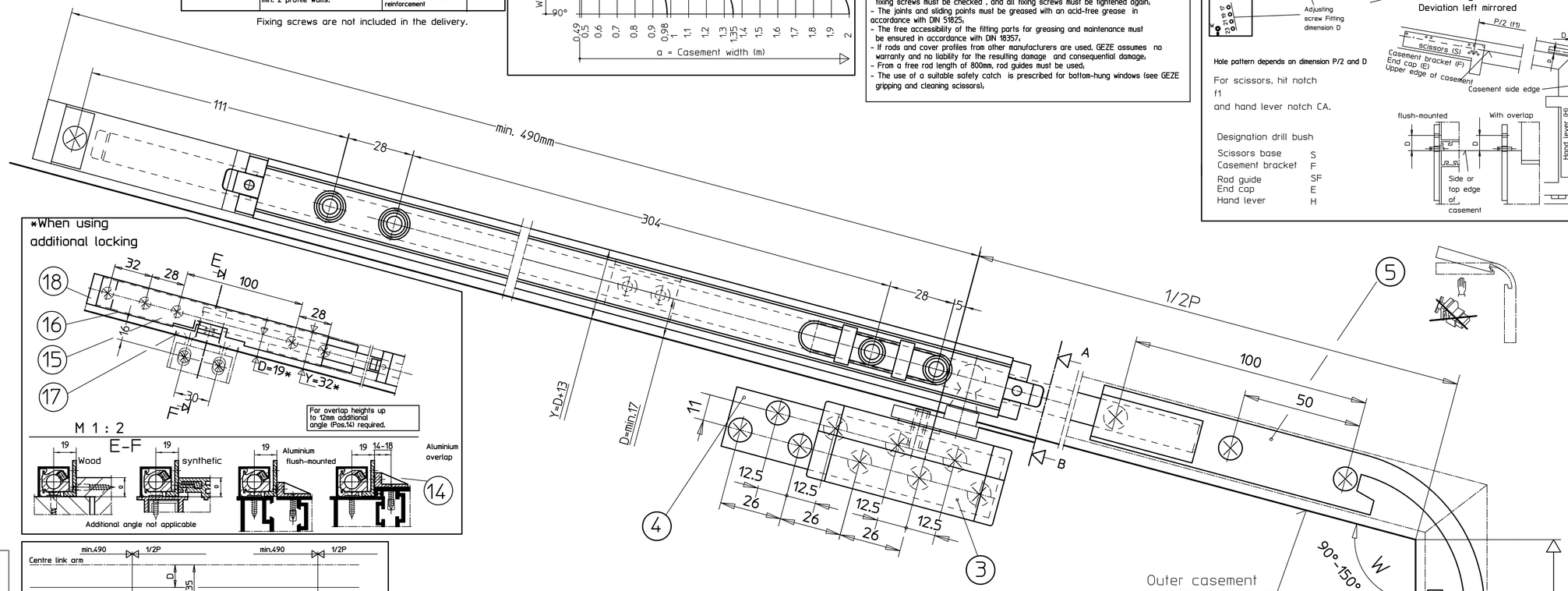

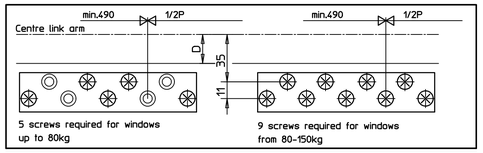

Lengths for rods and cover profiles :

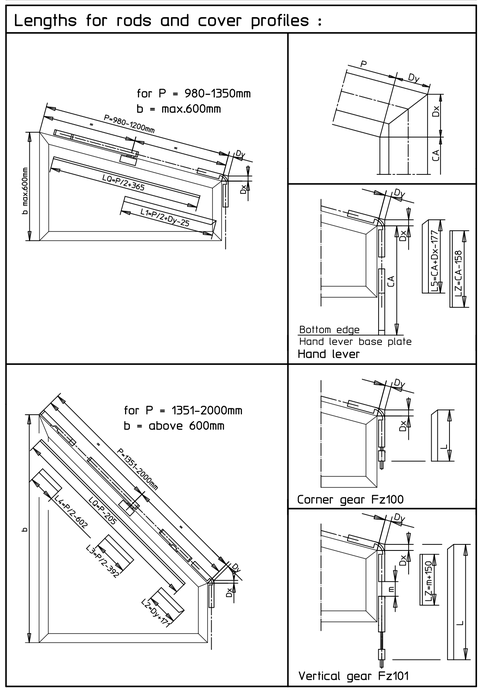

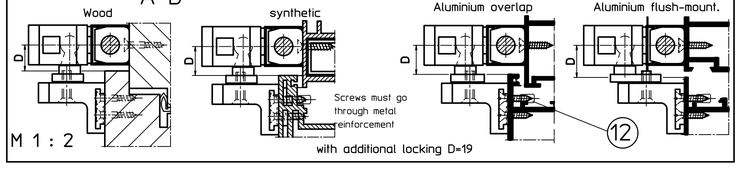

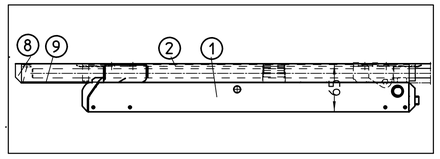

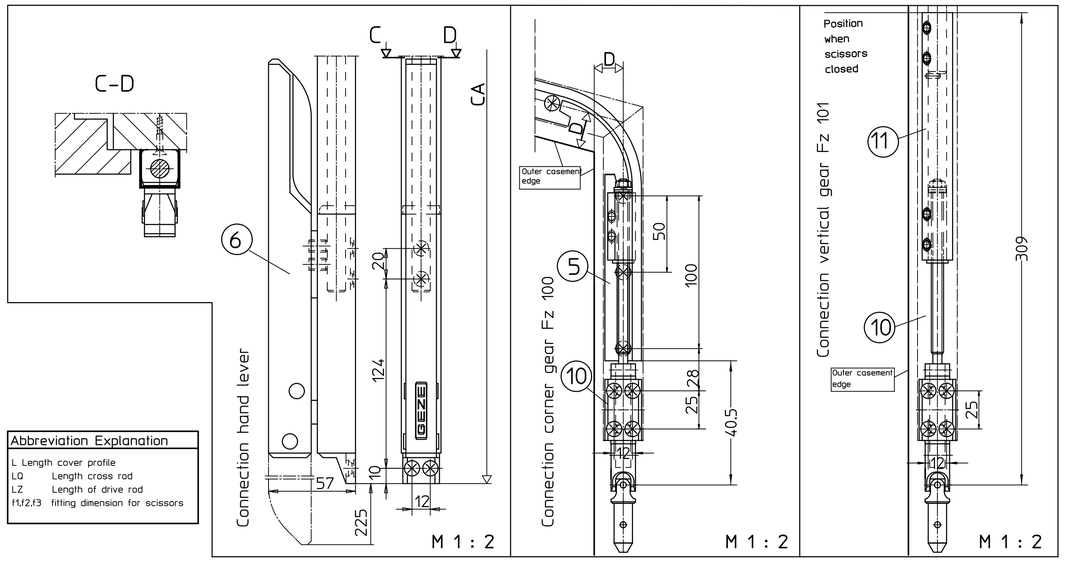

Abbreviation Explanation

L	Length cover profile
LQ	Length cross rod
LZ	Length of drive rod
f1,f2,f3	fitting dimension for scissors

Technical data

Opening width approx. 320mm(standard), fitting stroke 70mm

Opening width approx. 220mm(optional), fitting stroke 42mm

Further installation drawings for GEZE OL 320	
with hand lever or gear Fz100, Fz101	40424-EP-001
with additional locking	40424-EP-008
with electric drive E212 Vertical mounting	40424-EP-029
with electric drive E212 Horizontal mounting	40424-EP-030

Papierausdrucke dieser Zeichnung unterliegen nicht dem Änderungsdienst!
Printed drawings are not revision controlled!

EMPB = Erstmusterprüfbericht /initial sample test report

Pos.	P.F.	Name	Ident no. for version EV 1	white 9016	RAL	
		Scissors OL 320 Content:	128211	128212	128213	11
1	1	Scissors OL 320				
2	1	Scissors base				
3	1	Casement bracket, sliding				
	1	Screw plate, short				
7	1	Rod guide				
12	9	Protective cap				
4	1	**Screw plate, long**		063923		9
		Additional package end cover Content:	058633	018254	013816	1
8	1	End cap				
9	1	Profile for end cover				
		Additional locking Content:	063974	018257	013080	4
15	1	Locking mechanism				
16	1	Cover for locking mechanism				
17	1	Transome angle				
18	1	End cap				
14	1	**Additional angle for overlap** Up to 12mm	050727	015519	013077	2
6	1	**Hand lever stroke 70mm**	128161	128162	128163	4
		Corner gear Fz 100 Content		018194		10
10	1	Threaded spindle mounted				
5	1	Corner transmission				
		Vertical gear Fz 101 Content		018196		4
10	1	Threaded spindle mounted				
11	1	Pipe mounted				
7	1	Rod guide				
5	1	**Corner transmission**		058648		6
		Rod ⌀12 - 2000 mm		053198		
		- 3000 mm		053199		
		- 6000 mm		054116		
		Cover profile - 2000 mm*	058771	018293	014258	
		- 3000 mm*	058774	018294	014259	
		- 6000 mm	058630	018251		
		* mitre cut on both sides				
7	1	**Accessories** (Must be ordered separately)				
		Hand lever, stroke 42mm	131658	131659	131660	4
		Rod guide		058653		2
		Rod coupling		059729		
13		Drilling template for wood Drilling template for plastic and aluminium		137150 137152		

Index	Datum	Geprüft	Name	Änderungs-nr. Doc. control no.
03	21.10.21	ut1270	3362	
02	08.05.20	ut1270	*	
01	10.02.20	ut1270	*	

DIN 8 Dokumen. Gezeichnet

GEZE GmbH
P.O. Box 13 63
71226 Leonberg
Germany

vertraulich / confidential

	Datum/date	Name
erstellt / drawn	21.10.21	ut1270
Frg. Prod./Rel. Prod	22.10.21	tbf1

Benennung / designation
OL320 for pitched window
with hand lever or gear Fz100, Fz101

Blatt / von sheet / of 1 / 1
Material-Nr. ID-no.
Maßstab scale
Frg. Prod./Rel. Prod
Zeichnungs-Nr. / document-no.
40424-EP-006

Diese Zeichnung entspricht der Entstehungsstand der Zeichnungsdaten bzw. der letzten Änderungsmitteilung. Aus der Verwendung dieser Zeichnung können keine Ansprüche gleich welcher Art abgeleitet bzw. Schadensersatzansprüche begründet werden gegen GEZE, sofern gesetzlich zwingend. Die Zeichnung bleibt unser Eigentum und ist Dritten nur für die Zwecke der Herstellung überlassen. Gleiches gilt aus der Zeichnung ergebenden Angaben ebenen ausschließlich GEZE zu.
This drawing is the property of GEZE. It is only loaned to third parties for the purpose of production. This drawing reflects the actual state of product development at the date of its creation or the indicated date. No claims for damages to any form can be made against GEZE as a result of the interpretation of this drawing. This drawing remains the property of GEZE and is made available to third parties only for the duration of contractual obligations. All rights connected with this drawing remain in possession of GEZE. This drawing may not be copied or handed over to third parties without the express consent of GEZE.